# The Enclave at Greenway Park

## *Traffic Impact Study*

Berland Development Group, Inc.

Prepared for the City of Casper

January 12, 2015

**Prepared By:**

Sustainable Traffic Solutions, Inc.
823 West 124th Drive
Westminster, CO 80234
303.589.6875

Joseph L. Henderson, PE, PTOE
Wyoming PE Number 5814

# Table of Contents


Page

**1.0 Introduction ..... 1**

**2.0 Project Description ..... 1**

2.1 Proposed Development ..... 1

2.2 Study Assumptions ..... 1

**3.0 Existing Traffic Conditions ..... 2**

3.1 Traffic Counts and Level of Service ..... 2

**4.0 Future Traffic Conditions without the Proposed Development ..... 2**

**5.0 Trip Generation ..... 2**

**6.0 Trip Distribution and Assignment ..... 3**

**7.0 Traffic Conditions with the Proposed Development ..... 3**

**8.0 Need for Signalization ..... 3**

**9.0 Queue Lengths and Turn Bay Recommendations ..... 3**

**10.0 Conclusions and Recommendations ..... 3**


## List of Tables


Table 1 – Intersection and Movement Level of Service Summary

Table 2 – Trip Generation Estimate

Table 3 – 95th Percentile Queue Length Summary and Turn Bay Length Recommendations


## List of Figures


Figure 1 – Vicinity Map

Figure 2 – Site Plan

Figure 3 – Trip Distribution

Figure 4 – 15th Street / Missouri Avenue Traffic Volume Scenarios

Figure 5 – 15th Street / Pinyon Parkway Traffic Volume Scenarios

Figure 6 – Missouri Avenue / Pinyon Parkway Traffic Volume Scenarios

Figure 7 – 21st Street / Missouri Avenue Traffic Volume Scenarios

Figure 8 – 21st Street / Jasper Drive Traffic Volume Scenarios


## List of Appendices


Appendix A Traffic Count Data

Appendix B Synchro Analysis Results

Appendix C SimTraffic Analysis Results

# The Enclave at Greenway Park

## Traffic Impact Study

## 1.0 Introduction

Berland Development Group is proposing to construct the third phase of a multifamily housing development north of 21st Street adjacent to Jasper Drive (see Figure 1). The first two phases of the development are called The Preserve at Greenway Park and consist of 368 units which are completed and occupied.

## 2.0 Project Description

### 2.1 Proposed Development

The proposed site plan is contained in Figure 2. It shows the three phases of development and highlights Phase 3 which is the subject of this study. Based on discussions with Jason Knopp, the following intersections are included in the study area:

- 15th Street / Missouri Avenue
- 15th Street / Pinyon Parkway
- Missouri Avenue / Pinyon Parkway
- 21st Street / Missouri Avenue
- 21st Street / Jasper Drive

### 2.2 Study Assumptions

The following assumptions were utilized for this study.

- **Completion of the Development.** The development is expected to be completed in the summer of 2016, therefore, the short term planning horizon is 2016.
- **Long Term Horizon.** The long term horizon is Year 2040 to coincide with the current transportation master plan[1].
- **Completion of Pinyon Parkway.** Pinyon Parkway will be completed from Missouri Avenue to 15th Street by the Year 2040. The study includes short term and long term trip assignments considering that the traffic patterns will change when Pinyon Parkway is completed.
- **Saturation Flow Rate.** The saturation flow rate was assumed to be 1,625 passenger cars / hour / lane recognizing Wyoming motorists' driving habits and data collected in Cheyenne during the Yellowstone Road corridor signal timing project.

[1] Casper Area Long Range Transportation Plan. Casper Area Metropolitan Planning Organization. July 2014.

- **Peak Hour Factor**. The peak hour factor for the existing and short term traffic was based on the data collected. For the Year 2040 scenarios, the peak hour factor was assumed to be 0.92.
- **Truck Percentage.** The percentage of trucks was assumed to be 2%.

# 3.0 Existing Traffic Conditions

## 3.1 Traffic Counts and Level of Service

Traffic count and speed data were collected by the City of Casper during the week of December 8th. The peak hour volumes are summarized in Figures 4 through 8 and the count data are contained in Appendix A.

To evaluate the performance of the intersections within the study area, the Level of Service (LOS) was calculated using Synchro software. This software package utilizes criteria described in the Highway Capacity Manual[2]. LOS is a measure used to describe operational conditions at an intersection with categories ranging from A to F based on the predicted delay in seconds per vehicle for the intersection as a whole, as well as for individual turning movements. LOS A indicates very good operations, and LOS F indicates poor, congested operations. Acceptable intersection operation is LOS C or better based on Casper City Code.

All of the intersections are currently operating at LOS A during both peak hours. A summary of the intersection operation is contained in Table 1 and the Synchro output is contained in Appendix B.

# 4.0 Future Traffic Conditions without the Proposed Development

The background traffic that is expected in Years 2016 and 2040 is shown in Figures 4 through 8. Based on the transportation master plan, the future volumes assume an annual growth rate of 1.0%.

The intersection operation that is expected in Year 2016 and Year 2040 without the development of The Enclave at Greenway Park is summarized in Table 1. All of the intersections are expected to operate at LOS A during both horizon years. The Synchro output is contained in Appendix B.

# 5.0 Trip Generation

In order to determine the traffic impacts associated with the development of The Enclave at Greenway Park, the amount of traffic generated by the proposed development was estimated using trip generation rates contained in the Institute of Transportation Engineers

[2] Highway Capacity Manual (HCM 2010). Transportation Research Board. 2010.

Trip Generation manual[3]. The trip generation estimate is contained in Table 2.

## 6.0 Trip Distribution and Assignment

The trip distribution for the development is contained in Figure 3 and the assignment is contained in Figures 4 through 8. Figures 4, 5, and 6 contain short term and long term assignments reflecting the changing traffic patterns that will result when Pinyon Parkway is completed between Missouri Avenue and 15th Street.

## 7.0 Traffic Conditions with the Proposed Development

The short term conditions following completion of the development were estimated by combining the Year 2016 background traffic with the short term trip assignment. In the long term, the total traffic volumes were developed by combining the Year 2040 background traffic with the long term trip assignment and the reassigned volumes resulting from the completion of Pinyon Parkway. In both Year 2016 and Year 2040 total traffic conditions, all of the intersections are expected to operate at LOS A (see Table 1). The Synchro output is contained in Appendix B.

## 8.0 Need for Signalization

None of the stop controlled intersections are expected to warrant signalization based on the MUTCD as a result of this development.

## 9.0 Queue Lengths and Turn Bay Recommendations

The 95th percentile queue lengths for turning movements and for movements at stop controlled approaches were estimated using SimTraffic. Queue lengths are summarized in Table 3 along with the existing and recommended turn bay lengths. In locations where a defined turn bay doesn't exist, the available queuing distance is included in the table. The table shows that the 95th percentile queue length doesn't exceed the existing turn bay length and is not expected to exceed the turn bay length in any location. The SimTraffic output is contained in Appendix C.

## 10.0 Conclusions and Recommendations

Based on the analysis performed, STS makes the following conclusions:

- The intersections within the study area are currently operating at LOS A and are expected to operate at LOS A in Year 2040 following the completion of the development.
- The 95th percentile queue lengths are not expected to exceed the length of the existing turn bays and available queuing distances.

[3] Trip Generation. Institute of Transportation Engineers. 9th Edition. 2012.

- No stop controlled intersections are expected to warrant signalization as a result of the development of The Enclave at Greenway Park.

Based on the analysis performed, STS makes the following recommendations:

- Table 3 contains minimum recommended turn bay lengths.

# Tables

Table 1 – Intersection and Movement Level of Service Summary

Table 2 – Trip Generation Estimate

Table 3 – 95th Percentile Queue Length Summary and Turn Bay Length Recommendations

**Table 1. Intersection and Movement Level of Service Summary**

| Signalized Intersections | Existing | | | | 2016 Background | | | | 2016 Total | | | | 2040 Background | | | | 2040 Total | | | |
|---|---|---|---|---|---|---|---|---|---|---|---|---|---|---|---|---|---|---|---|---|
| | Morning | | Evening | | Morning | | Evening | | Morning | | Evening | | Morning | | Evening | | Morning | | Evening | |
| | Delay | LOS | Delay | LOS | Delay | LOS | Delay | LOS | Delay | LOS | Delay | LOS | Delay | LOS | Delay | LOS | Delay | LOS | Delay | LOS |
| **15th Street / Missouri Avenue** | **9.1** | **A** | **7** | **A** | **9.2** | **A** | **7.1** | **A** | **10.4** | **B** | **8** | **A** | **10.4** | **B** | **8.9** | **A** | **10.5** | **B** | **9.1** | **A** |
| Eastbound Left Turn | 5.3 | A | 3.1 | A | 5.5 | A | 3.2 | A | 6.3 | A | 3.3 | A | 6.5 | A | 3.8 | A | 7 | A | 4 | A |
| Eastbound Thru plus Right Turn | 4.7 | A | 4.7 | A | 4.9 | A | 4.8 | A | 5.6 | A | 5.2 | A | 5.5 | A | 6.2 | A | 5.9 | A | 6.7 | A |
| Westbound Left Turn | 5.7 | A | 7.4 | A | 5.9 | A | 7.7 | A | 7 | A | 8.9 | A | 6.9 | A | 12.1 | B | 7.3 | A | 12 | B |
| Westbound Thru plus Right Turn | 4.8 | A | 3 | A | 4.9 | A | 3 | A | 5.5 | A | 3.1 | A | 5.7 | A | 3.6 | A | 6.1 | A | 3.7 | A |
| Northbound Left Turn | 30.8 | C | 31.6 | C | 30.7 | C | 31.6 | C | 29.9 | C | 31.8 | C | 30.1 | C | 31.9 | C | 29.9 | C | 31.9 | C |
| Northbound Thru plus Right Turn | 27.6 | C | 31 | C | 27.6 | C | 31 | C | 27.1 | C | 31.6 | C | 27.5 | C | 32.3 | C | 25.7 | C | 31 | C |
| Southbound Left Turn | 27.9 | C | 30.7 | C | 27.9 | C | 30.7 | C | 27.8 | C | 31.1 | C | 28.2 | C | 31.4 | C | 26.3 | C | 30.7 | C |
| Southbound Thru plus Right Turn | 26.5 | C | 29.7 | C | 26.4 | C | 29.7 | C | 25.2 | C | 29.5 | C | 25.4 | C | 29.3 | C | 24.7 | C | 29 | C |

| Stop Controlled Intersections | Existing | | | | 2016 Background | | | | 2016 Total | | | | 2040 Background | | | | 2040 Total | | | |
|---|---|---|---|---|---|---|---|---|---|---|---|---|---|---|---|---|---|---|---|---|
| | Morning | | Evening | | Morning | | Evening | | Morning | | Evening | | Morning | | Evening | | Morning | | Evening | |
| | Delay | LOS | Delay | LOS | Delay | LOS | Delay | LOS | Delay | LOS | Delay | LOS | Delay | LOS | Delay | LOS | Delay | LOS | Delay | LOS |
| **15th Street / Pinyon Parkway** | **0.4** | **A** | **0.2** | **A** | **0.4** | **A** | **0.2** | **A** | **0.4** | **A** | **0.2** | **A** | **0.2** | **A** | **0.1** | **A** | **0.9** | **A** | **0.9** | **A** |
| Northbound Left Turn | 13 | B | 13.5 | B | 13.2 | B | 13.6 | B | 13.5 | B | 13.9 | B | 14 | B | 16.2 | C | 12.2 | B | 14.5 | B |
| Westbound Left Turn | 8.1 | A | 8.5 | A | 8.2 | A | 8.5 | A | 8.2 | A | 8.5 | A | 8.4 | A | 9 | A | 8.4 | A | 9.2 | A |
| **Missouri Avenue / Pinyon Parkway** | **4** | **A** | **3.2** | **A** | **4** | **A** | **3.2** | **A** | **5.1** | **A** | **4.3** | **A** | **3.4** | **A** | **2.5** | **A** | **2.4** | **A** | **1.6** | **A** |
| Westbound Left Turn | 9.2 | A | 9 | A | 9.2 | A | 9 | A | 9.5 | A | 9.1 | A | 9.2 | A | 8.9 | A | 9 | A | 8.9 | A |
| Southbound Left Turn | 7.4 | A | 7.5 | A | 7.4 | A | 7.5 | A | 7.5 | A | 7.6 | A | 7.4 | A | 7.5 | A | 7.4 | A | 7.4 | A |
| **21st Street / Missouri Avenue** | **1.9** | **A** | **2.2** | **A** | **1.9** | **A** | **2.3** | **A** | **2** | **A** | **2.3** | **A** | **2** | **A** | **2.2** | **A** | **2** | **A** | **2.3** | **A** |
| Eastbound Left Turn | 7.9 | A | 7.7 | A | 7.9 | A | 7.7 | A | 7.9 | A | 7.8 | A | 7.9 | A | 7.9 | A | 7.9 | A | 7.9 | A |
| Southbound Left Turn | 13.1 | B | 11.6 | B | 13.2 | B | 11.7 | B | 13.4 | B | 11.9 | B | 14.6 | B | 12.7 | B | 14.7 | B | 12.9 | B |
| Southbound Right Turn | 9.7 | A | 9.7 | A | 9.7 | A | 9.7 | A | 9.8 | A | 9.8 | A | 9.7 | A | 10.1 | B | 9.8 | A | 10.1 | B |
| **21st Street / Jasper Drive** | **1.5** | **A** | **1.1** | **A** | **1.5** | **A** | **1.1** | **A** | **1.9** | **A** | **1.3** | **A** | **1.1** | **A** | **0.7** | **A** | **1.4** | **A** | **0.9** | **A** |
| Eastbound Left Turn | 7.6 | A | 7.8 | A | 7.6 | A | 7.8 | A | 7.6 | A | 7.8 | A | 7.7 | A | 7.9 | A | 7.7 | A | 8 | A |
| Southbound Right Turn | 11.4 | B | 11 | B | 11.5 | B | 11.1 | B | 11.7 | B | 11.3 | B | 11.8 | B | 11.7 | B | 12 | B | 11.9 | B |

**Table 2. Trip Generation Estimate**

| Land Use [2] | ITE Code [1] | Size | Unit | Average Daily Trips | | | | Morning Peak Hour Trips | | | | Evening Peak Hour Trips | | | |
|---|---|---|---|---|---|---|---|---|---|---|---|---|---|---|---|
| | | | | Rate | Total | In | Out | Rate | Total | In | Out | Rate | Total | In | Out |
| Apartment | 220 | 134 | DU | 6.65 | 891 | 446 | 446 | 0.51 | 68 | 14 | 55 | 0.62 | 83 | 54 | 29 |

Notes:

1. Trip generation estimates are based on rates contained in Trip Generation, 8th Edition (Institute of Transportation Engineers, 2008).
2. The land use estimate was provided by Berland Development Group, Inc.

**Table 3. 95th Percentile Queue Length Summary and Turn Bay Length Recommendations**

| 15th Street / Missouri Avenue | Existing Turn Bay Length [1] | Recommended Turn Bay Length | Existing | | Year 2016 Background | | Year 2016 Total | | Year 2040 Background | | Year 2040 Total | |
|---|---|---|---|---|---|---|---|---|---|---|---|---|
| | | | AM | PM | AM | PM | AM | PM | AM | PM | AM | PM |
| Eastbound Left Turn | 100 | 100 | 19 | 13 | 20 | 12 | 21 | 12 | 27 | 12 | 27 | 16 |
| Westbound Left Turn | 150 | 150 | 60 | 77 | 58 | 79 | 61 | 81 | 68 | 88 | 67 | 85 |
| Northbound Left Turn | 300 | 300 | 80 | 67 | 81 | 68 | 82 | 71 | 84 | 73 | 84 | 75 |
| Southbound Left Turn | 25 | 25 | 15 | 19 | 16 | 20 | 13 | 18 | 18 | 23 | 19 | 21 |

| 15th Street / Pinyon Parkway | Existing Turn Bay Length | Recommended Turn Bay Length | Existing | | Year 2016 Background | | Year 2016 Total | | Year 2040 Background | | Year 2040 Total | |
|---|---|---|---|---|---|---|---|---|---|---|---|---|
| | | | AM | PM | AM | PM | AM | PM | AM | PM | AM | PM |
| Westbound Left Turn | 100 | 100 | 16 | 14 | 15 | 13 | 16 | 12 | 13 | 15 | 27 | 47 |

| Missouri Avenue / Pinyon Parkway | Existing Turn Bay Length | Recommended Turn Bay Length | Existing | | Year 2016 Background | | Year 2016 Total | | Year 2040 Background | | Year 2040 Total | |
|---|---|---|---|---|---|---|---|---|---|---|---|---|
| | | | AM | PM | AM | PM | AM | PM | AM | PM | AM | PM |
| Westbound Left Turn plus Right Turn | 75 | 75 | 48 | 40 | 46 | 40 | 52 | 48 | 49 | 40 | 48 | 34 |
| Southbound Left Turn | 200 | 60 (minimum) | 11 | 20 | 8 | 21 | 12 | 27 | 13 | 25 | 8 | 14 |

| 21st Street / Missouri Avenue | Existing Turn Bay Length | Recommended Turn Bay Length | Existing | | Year 2016 Background | | Year 2016 Total | | Year 2040 Background | | Year 2040 Total | |
|---|---|---|---|---|---|---|---|---|---|---|---|---|
| | | | AM | PM | AM | PM | AM | PM | AM | PM | AM | PM |
| Eastbound Left Turn plus Through | 0 | 60 (minimum) | 37 | 31 | 42 | 30 | 45 | 33 | 53 | 35 | 56 | 36 |
| Southbound Left Turn | 190 | 190 | 31 | 36 | 30 | 37 | 30 | 35 | 34 | 39 | 32 | 36 |
| Southbound Right Turn | 190 | 190 | 44 | 48 | 43 | 48 | 49 | 48 | 48 | 52 | 46 | 53 |

| 21st Street / Jasper Drive | Existing Turn Bay Length | Recommended Turn Bay Length | Existing | | Year 2016 Background | | Year 2016 Total | | Year 2040 Background | | Year 2040 Total | |
|---|---|---|---|---|---|---|---|---|---|---|---|---|
| | | | AM | PM | AM | PM | AM | PM | AM | PM | AM | PM |
| Eastbound Left Turn | 585 | 60 (minimum) | 7 | 16 | 8 | 19 | 7 | 22 | 9 | 21 | 9 | 23 |
| Southbound Left Turn plus Right Turn | 70 | 70 | 53 | 41 | 53 | 41 | 56 | 44 | 51 | 43 | 53 | 46 |

Note.

1. In locations where a turn bay is not defined by pavement markings, the available queuing distance is included in the table.

# Figures

Figure 1 – Vicinity Map
Figure 2 – Site Plan
Figure 3 – Trip Distribution
Figure 4 – 15th Street / Missouri Avenue Traffic Volume Scenarios
Figure 5 – 15th Street / Pinyon Parkway Traffic Volume Scenarios
Figure 6 – Missouri Avenue / Pinyon Parkway Traffic Volume Scenarios
Figure 7 – 21st Street / Missouri Avenue Traffic Volume Scenarios
Figure 8 – 21st Street / Jasper Drive Traffic Volume Scenarios

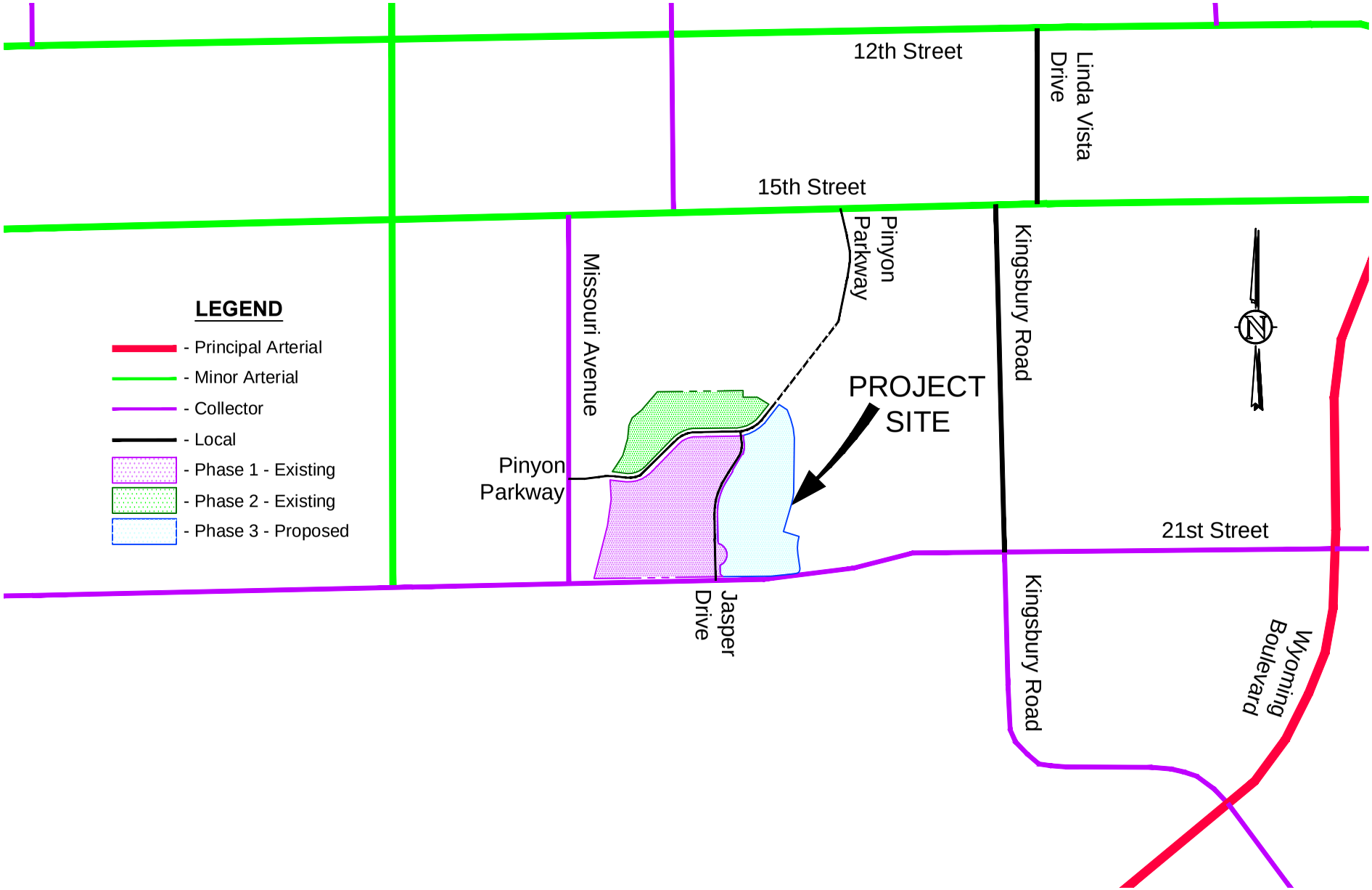


STS

The Enclave at Greenway Park
VICINITY MAP

| Scale | 1" = 1,000' | Date | January 12, 2015 | Drawn by | JBH | Job # | City of Casper | Figure | 1 |
|---|---|---|---|---|---|---|---|---|---|

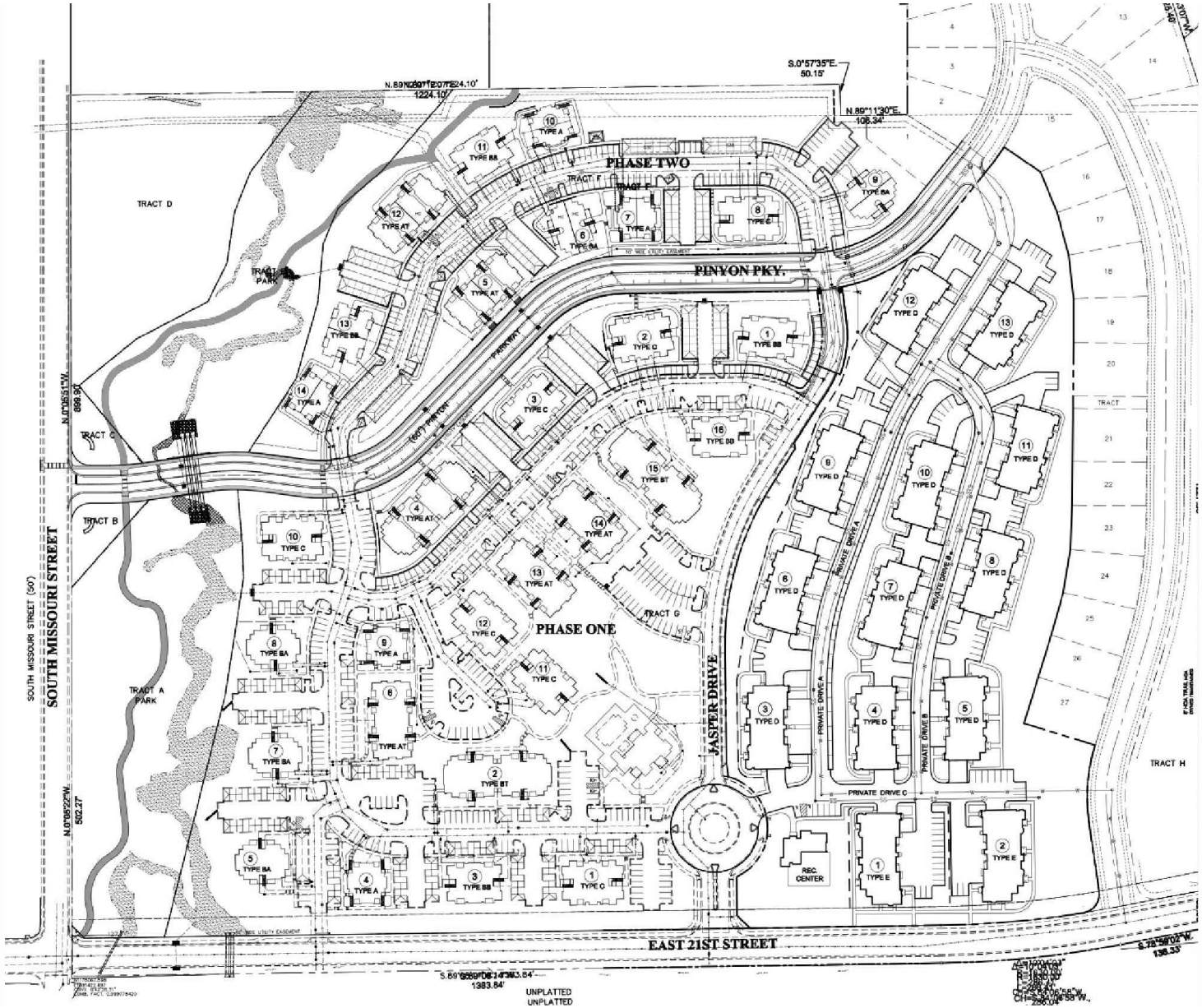


STS

The Enclave at Greenway Park

SITE PLAN

| Scale | 1" = 250' | Date | January 12, 2015 | Drawn by | JBH | Job # | City of Casper | Figure | 2 |
|---|---|---|---|---|---|---|---|---|---|

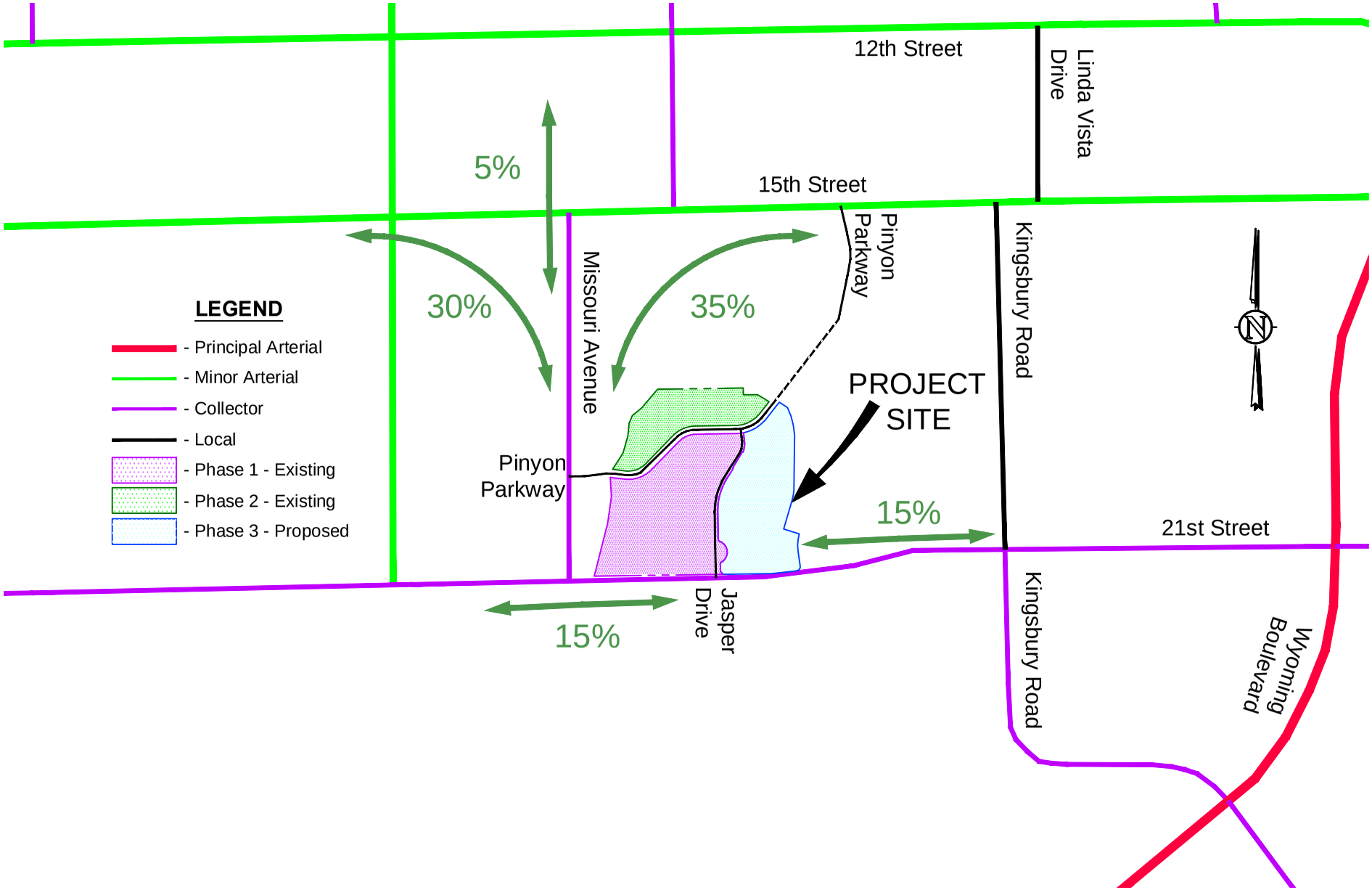


STS

The Enclave at Greenway Park
TRIP DISTRIBUTION

| Scale | 1" = 1,000' | Date | January 12, 2015 | Drawn by | JBH | Job # | City of Casper | Figure | 3 |
|---|---|---|---|---|---|---|---|---|---|

# Figure 4. 15th Street / Missouri Avenue Traffic Volume Scenarios

## Existing Peak Hour Traffic

### AM Peak

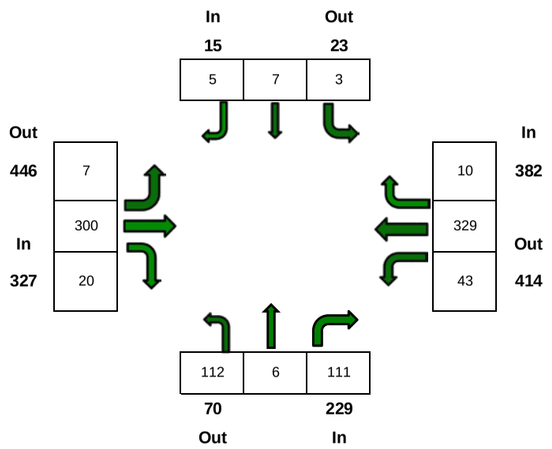


### Evening Peak

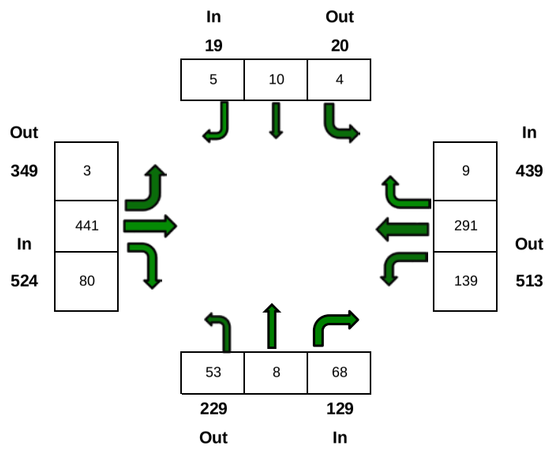


## Daily Volumes

| Leg | Existing | 2016 Background | 2040 Background | Assignment | 2016 Total | 2040 Total |
|---|---|---|---|---|---|---|
| North | | | | 45 | | |
| South | | | | 624 | | |
| East | 8,275 | 8,440 | 10,720 | 312 | 8,750 | 11,030 |
| West | | | | 267 | | |

## 2016 Background Peak Hour Traffic

### AM Peak

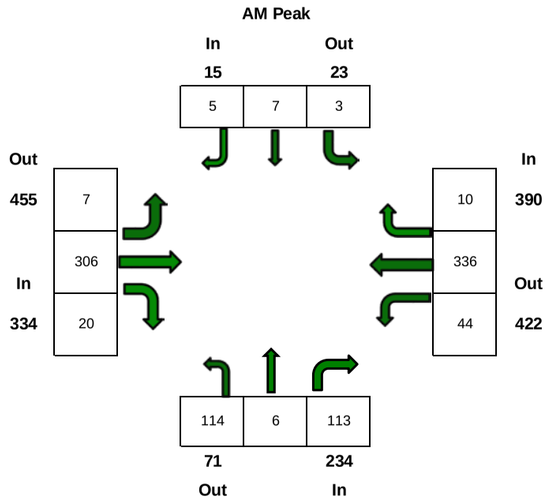


### Evening Peak

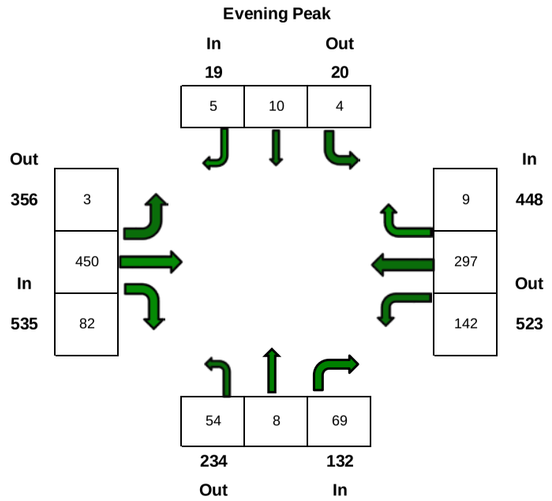


## 2040 Background Peak Hour Traffic

### AM Peak

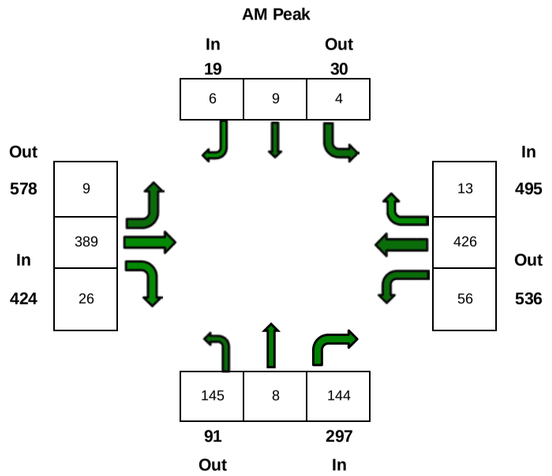


### Evening Peak

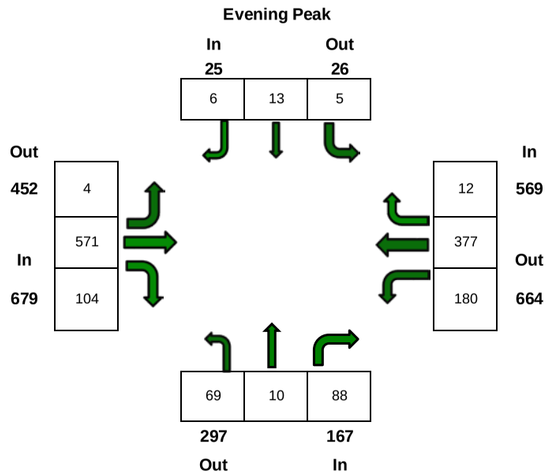


## Short Term Assignment

### AM Peak

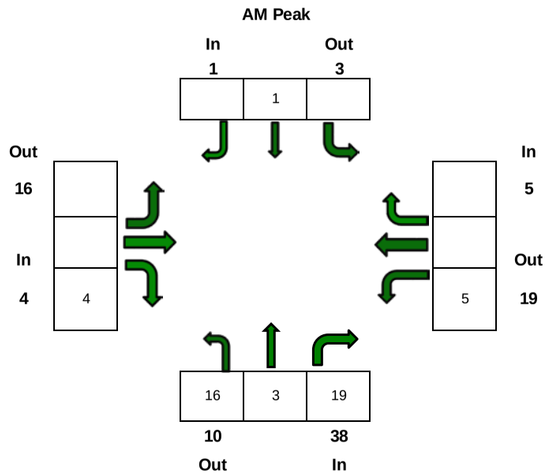


### Evening Peak

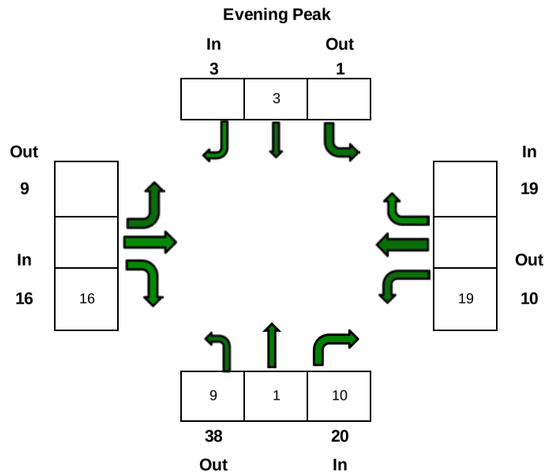

# Figure 4A. 15th Street / Missouri Avenue Traffic Volume Scenarios

## 2016 Total Peak Hour Traffic

### AM Peak

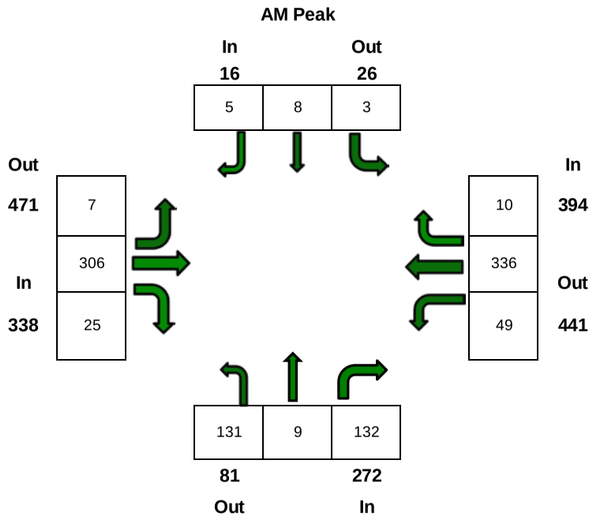


### Evening Peak

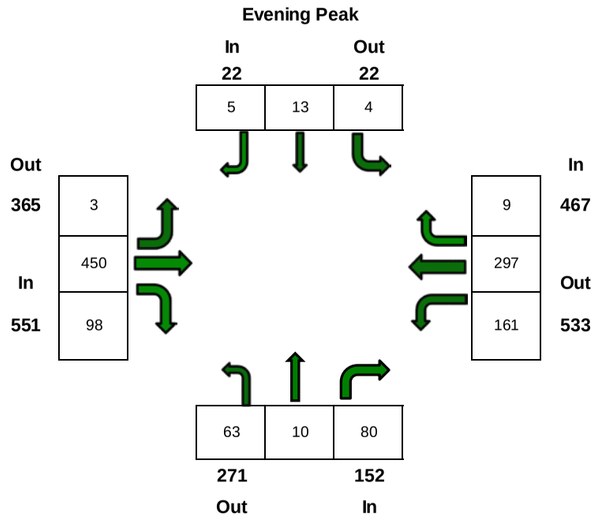


## Long Term Assignment

### AM Peak

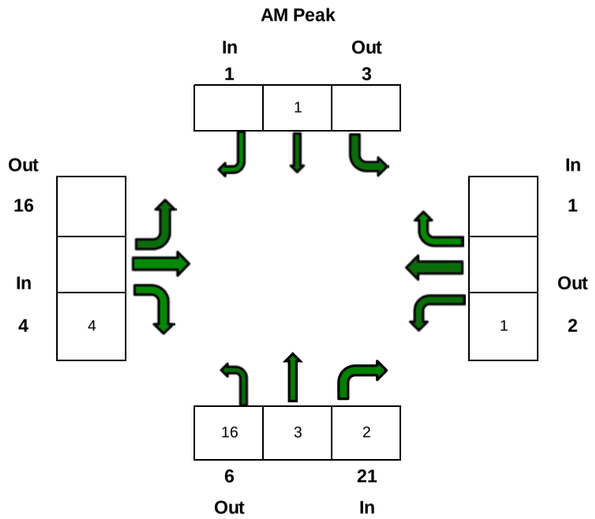


### Evening Peak

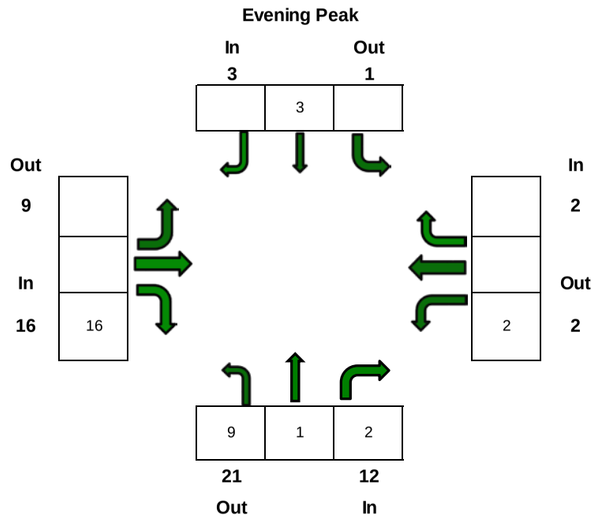


## Reassigned Volumes Following the Completion of Pinyon Parkway

### AM Peak

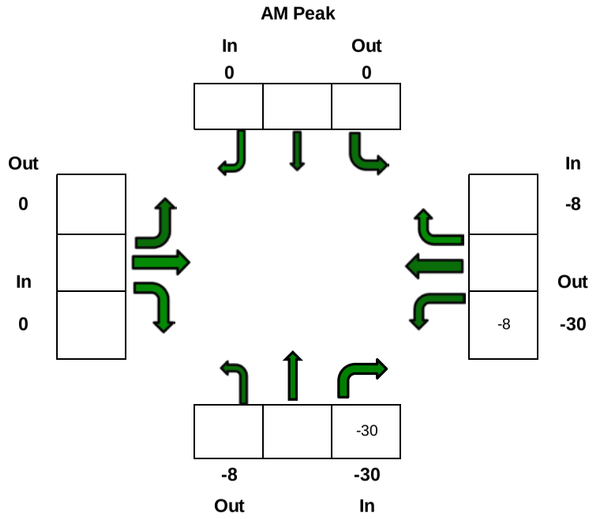


### Evening Peak

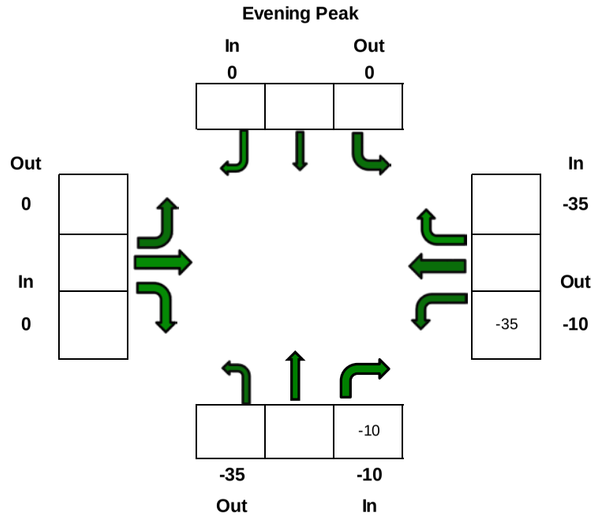


## 2040 Total Peak Hour Traffic

### AM Peak

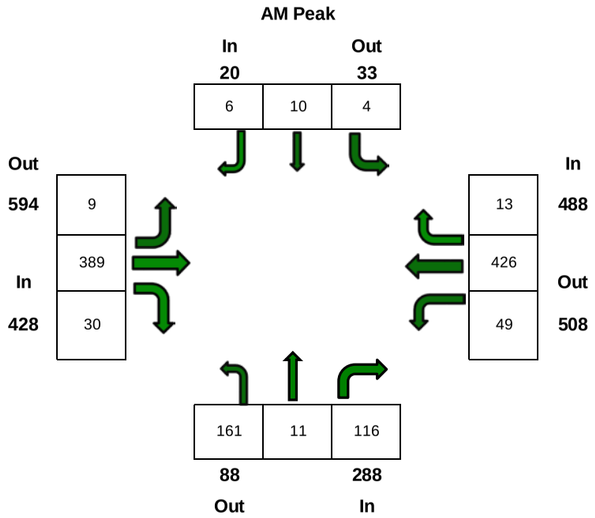


### Evening Peak

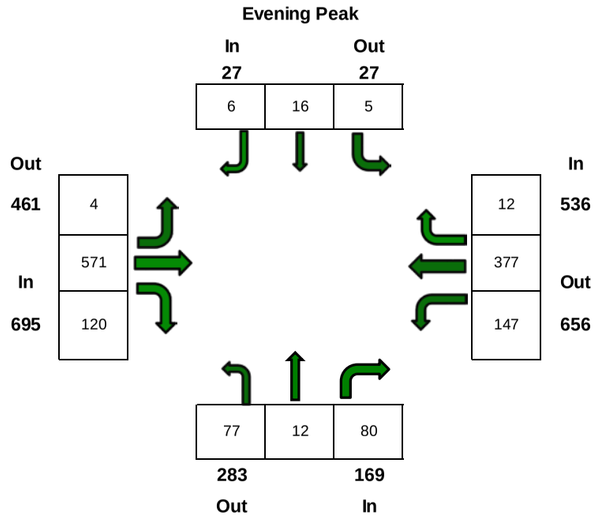

# Figure 5. 15th Street / Pinyon Parkway Traffic Volume Scenarios

## Existing Peak Hour Traffic

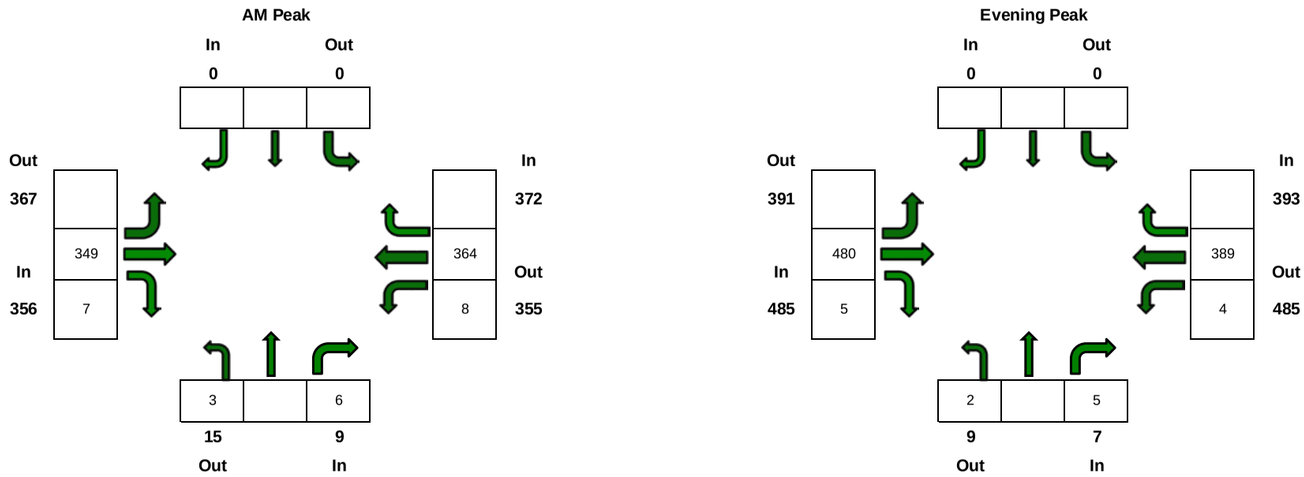


## Daily Volumes

| Leg | Existing | 2016 Background | 2040 Background | Assignment | 2016 Total | 2040 Total |
|---|---|---|---|---|---|---|
| North | | 0 | 0 | | | |
| South | | 0 | 0 | | | |
| East | 8,275 | 8,440 | 10,720 | 312 | 8,750 | 11,030 |
| West | 8,275 | 8,440 | 10,720 | 312 | 8,750 | 11,030 |

## 2016 Background Peak Hour Traffic

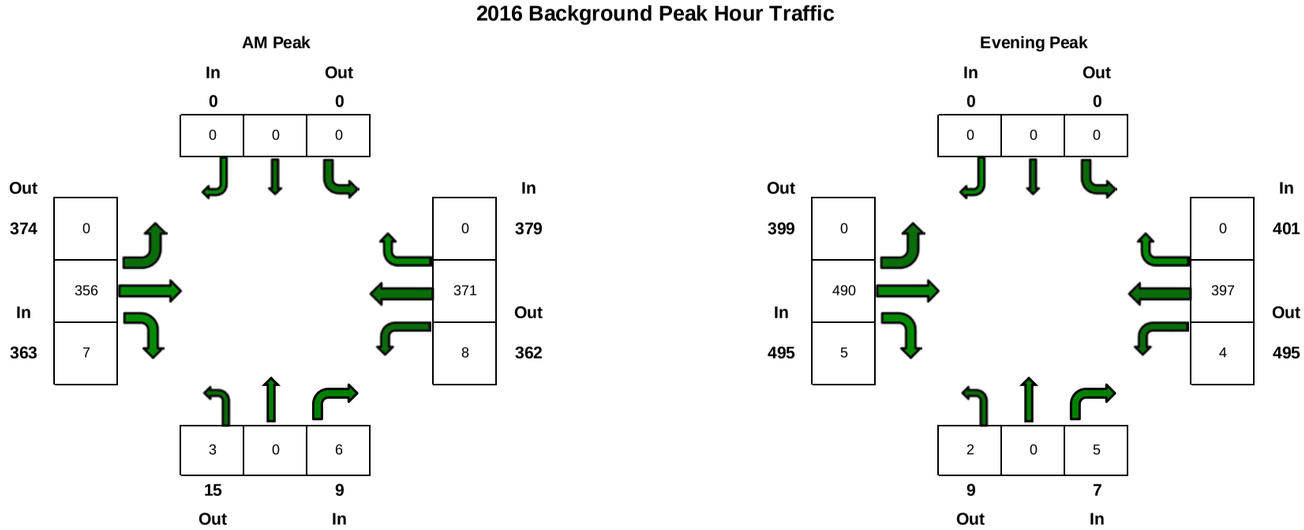


## 2040 Background Peak Hour Traffic

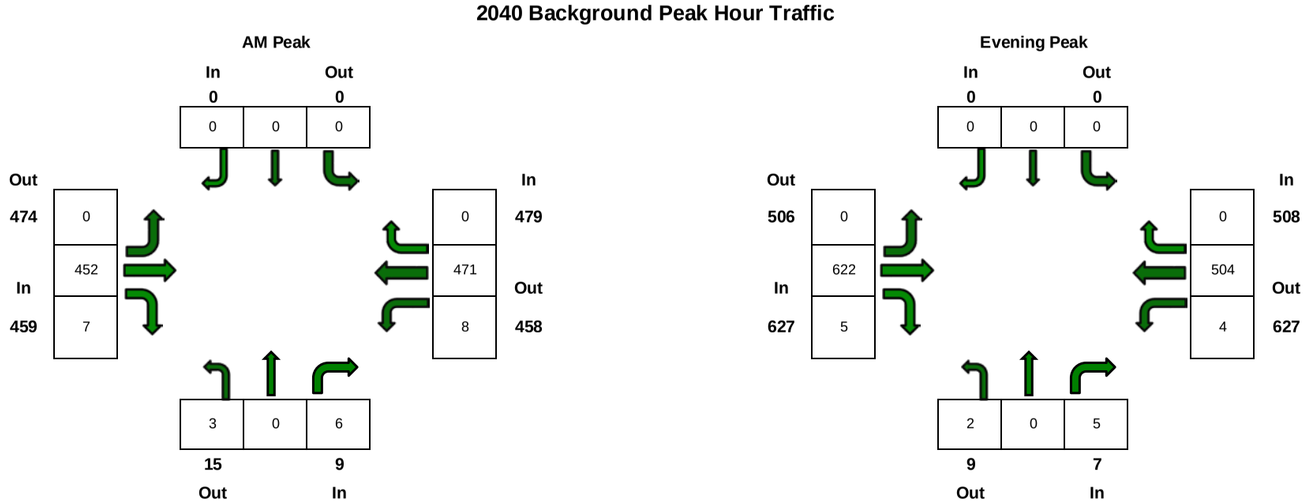


## Short Term Assignment

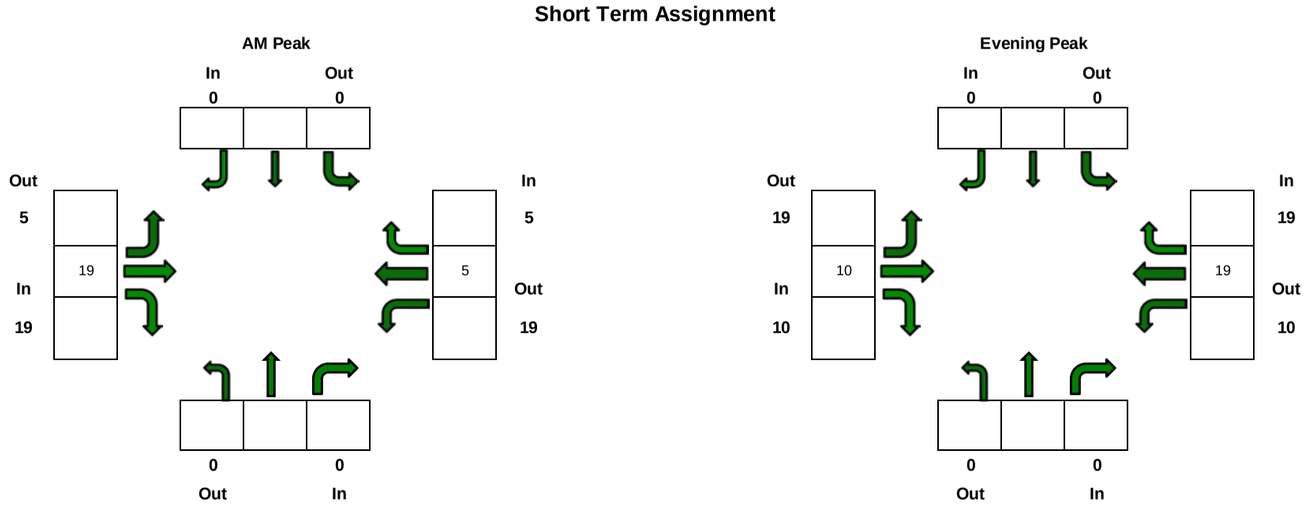

# Figure 5A. 15th Street / Pinyon Parkway Traffic Volume Scenarios

## 2016 Total Peak Hour Traffic

### AM Peak

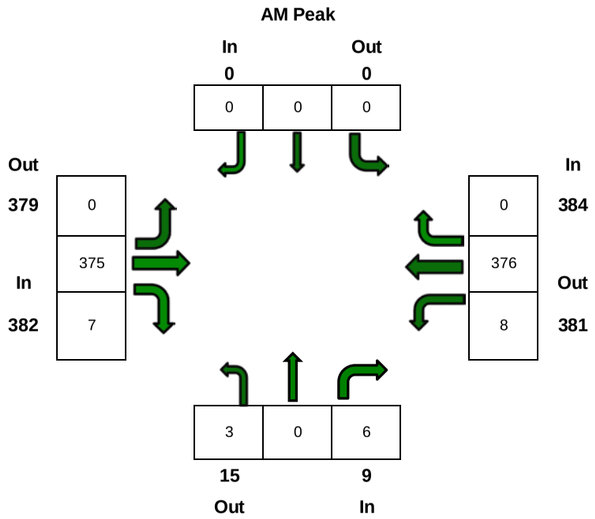


### Evening Peak

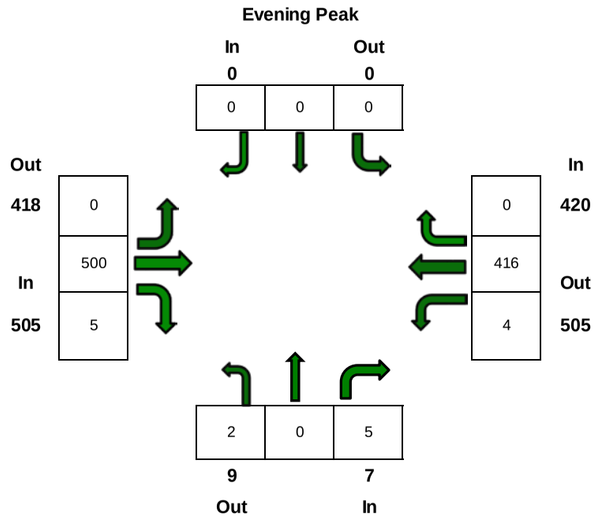


## Long Term Assignment

### AM Peak

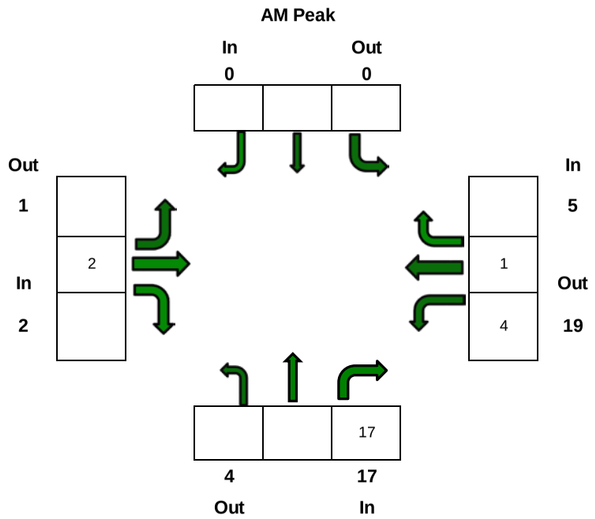


### Evening Peak

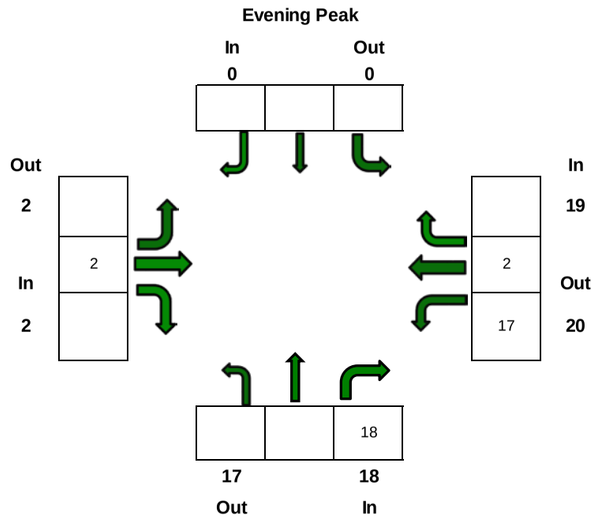


## Reassigned Volumes Following the Completion of Pinyon Parkway

### AM Peak

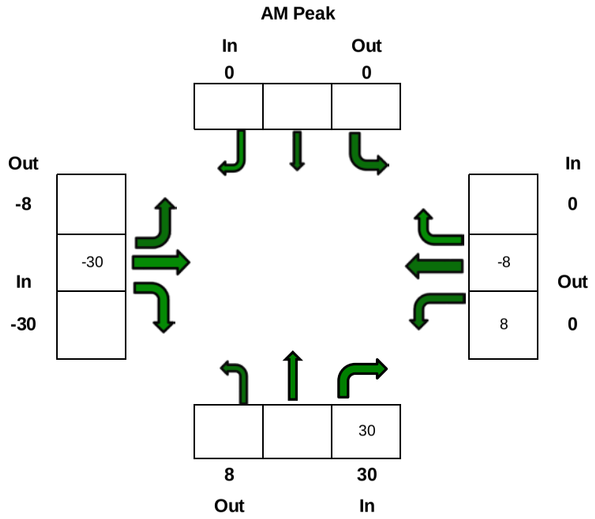


### Evening Peak

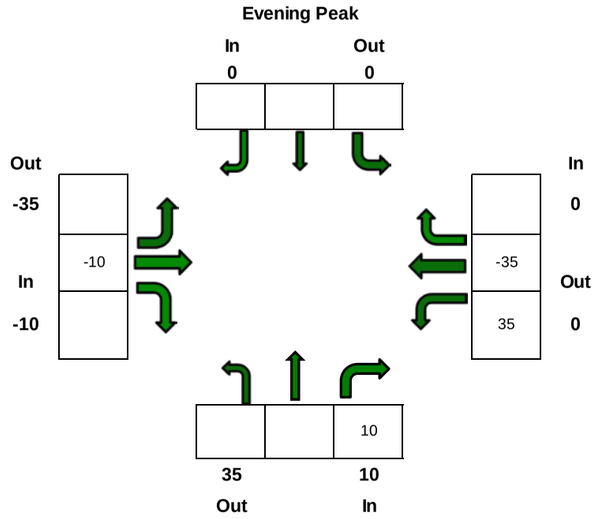


## 2040 Total Peak Hour Traffic

### AM Peak

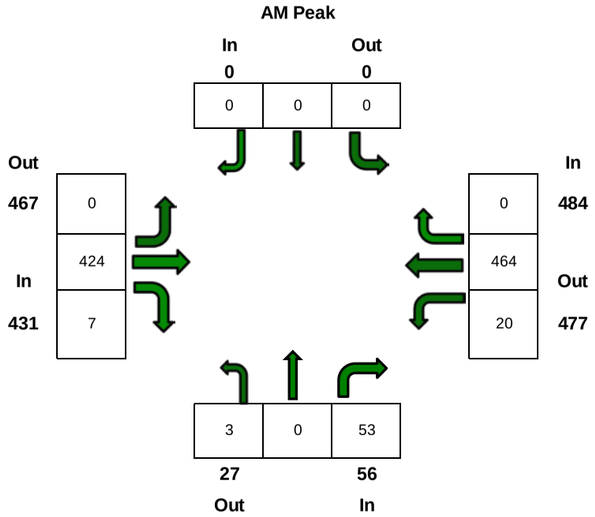


### Evening Peak

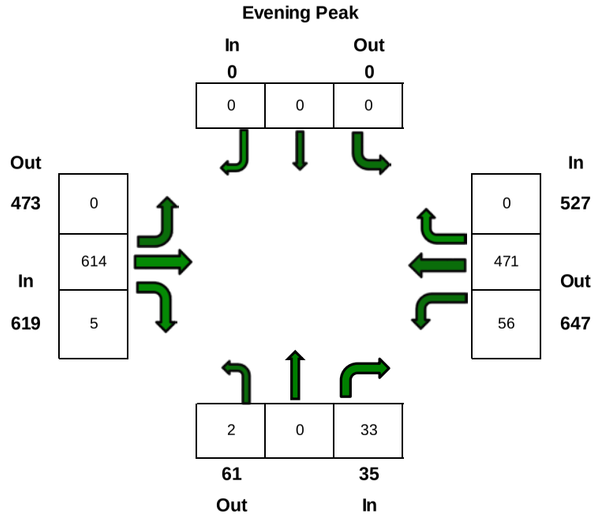

# Figure 6. Missouri Avenue / Pinyon Parkway Traffic Volume Scenarios

## Existing Peak Hour Traffic

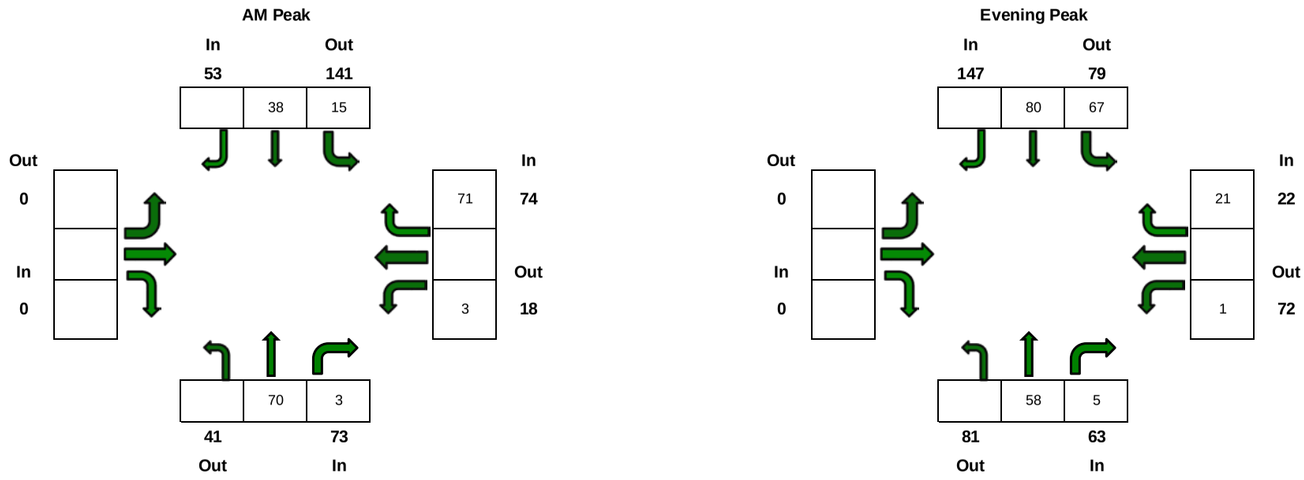


### Daily Volumes

| Leg | Existing | 2016 Background | 2040 Background | Assignment | 2016 Total | 2040 Total |
|---|---|---|---|---|---|---|
| North | 1,466 | 1,510 | 1,900 | 624 | 2,120 | 2,520 |
| South | | | | | | |
| East | | | | | | |
| West | | | | | | |

## 2016 Background Peak Hour Traffic

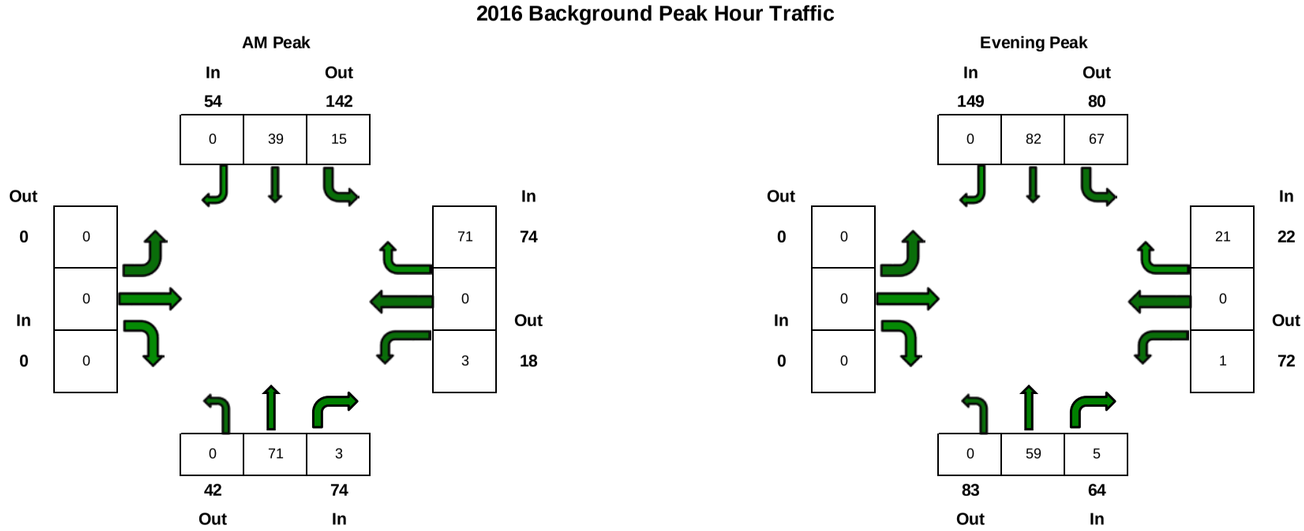


## 2040 Background Peak Hour Traffic

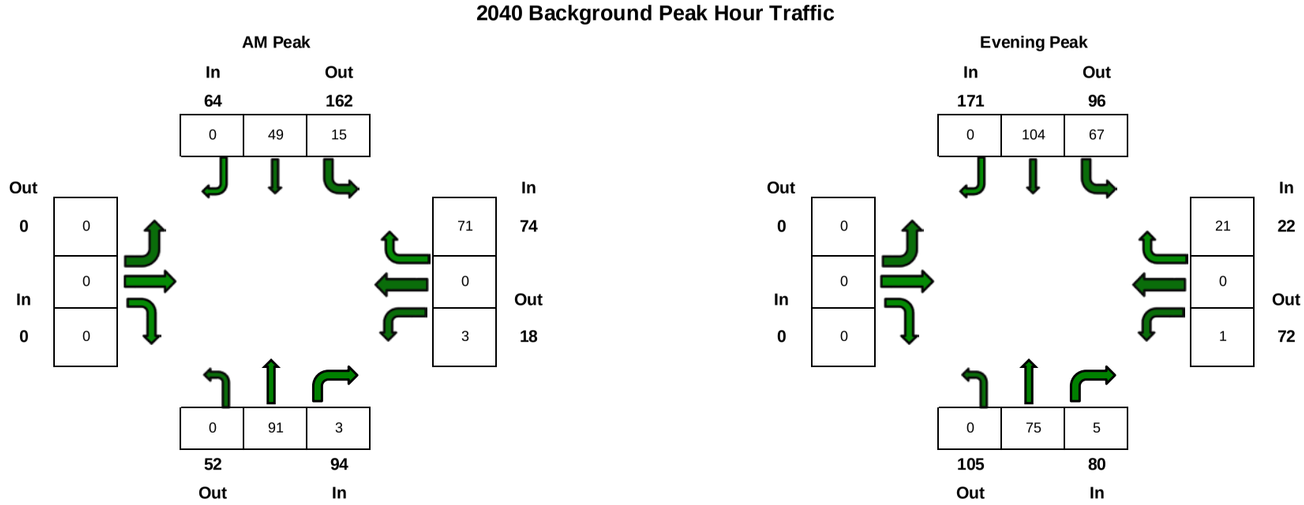


## Short Term Assignment

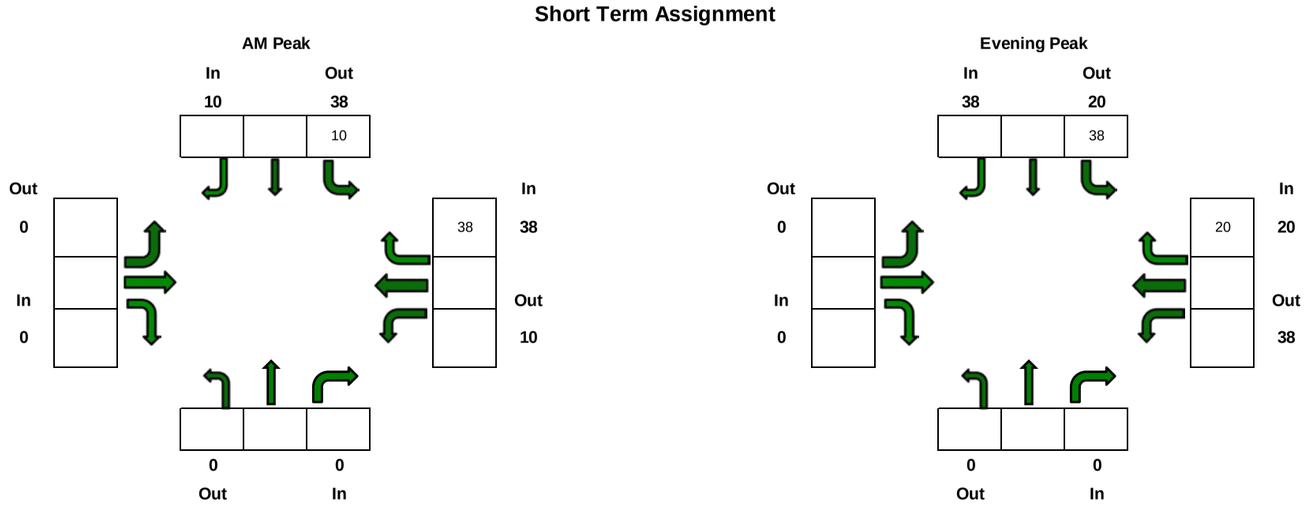

# Figure 6A. Missouri Avenue / Pinyon Parkway Traffic Volume Scenarios

## 2016 Total Peak Hour Traffic

### AM Peak

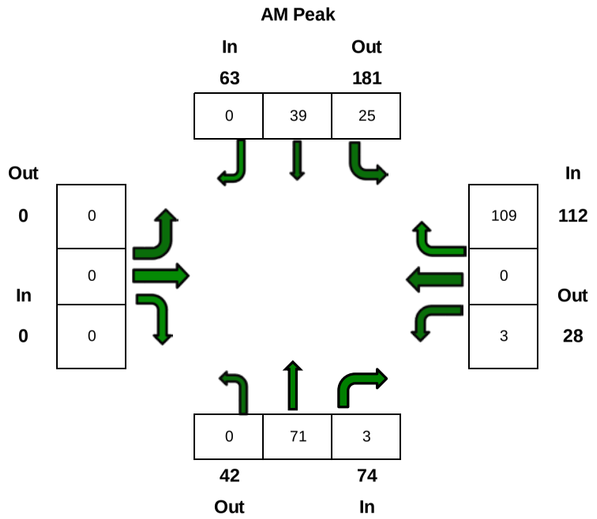


### Evening Peak

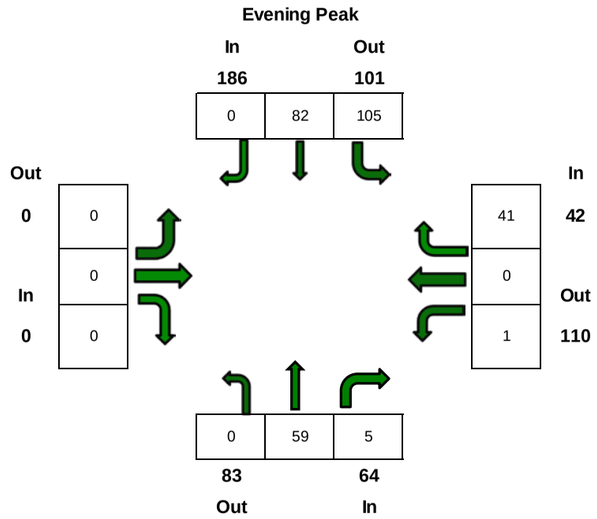


## Long Term Assignment

### AM Peak

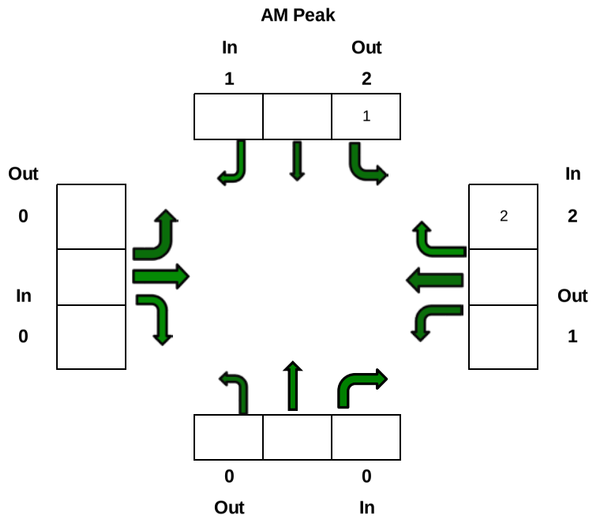


### Evening Peak

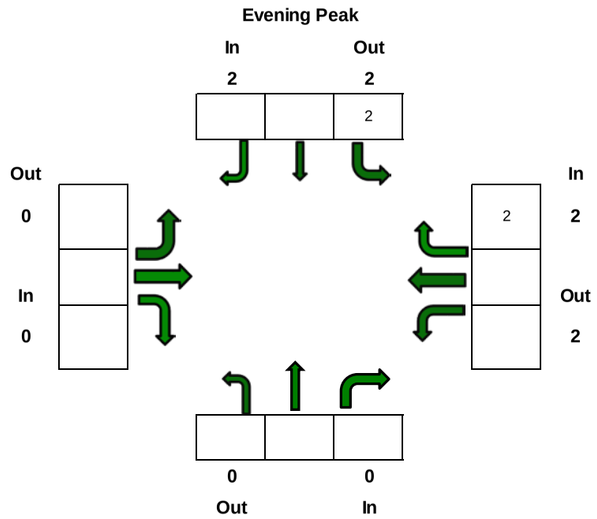


## Reassigned Volumes Following the Completion of Pinyon Parkway

### AM Peak

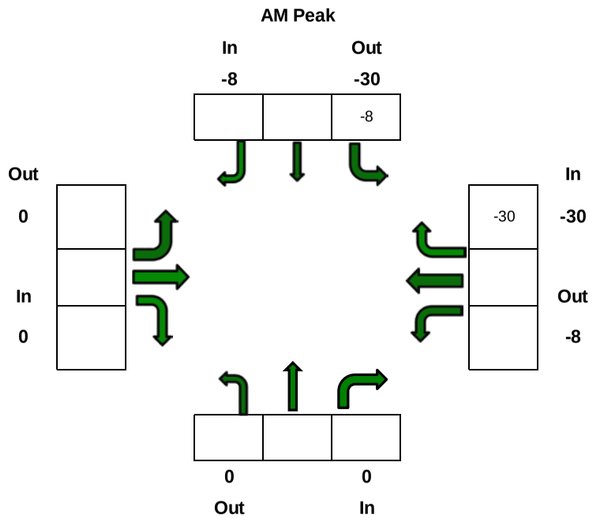


### Evening Peak

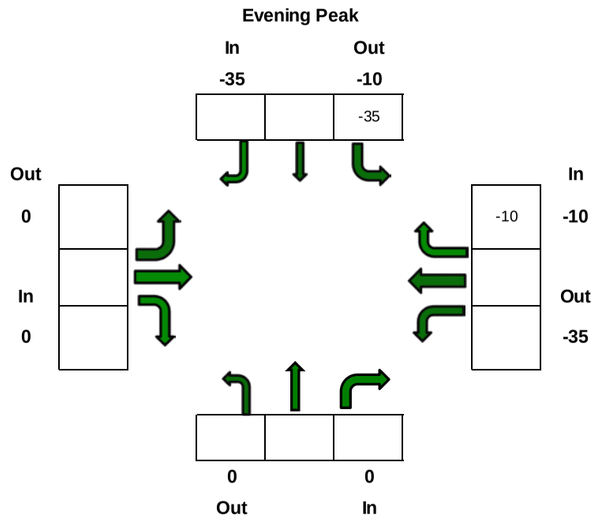


## 2040 Total Peak Hour Traffic

### AM Peak

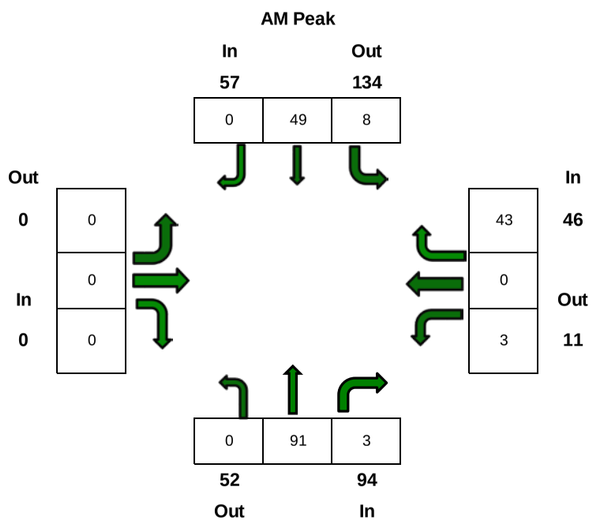


### Evening Peak

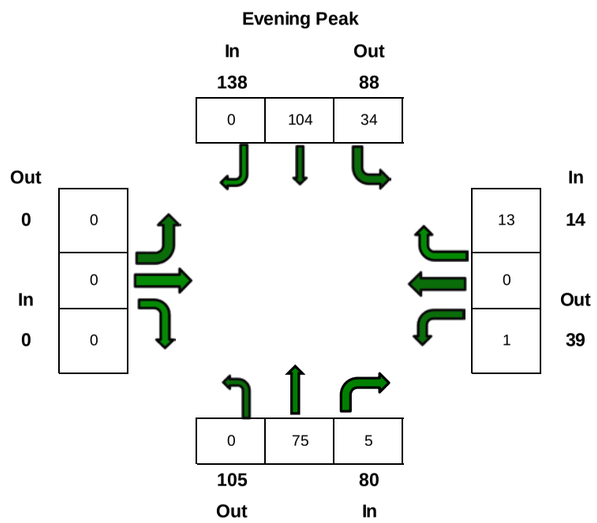

## Figure 7. 21st Street / Missouri Avenue Traffic Volume Scenarios

### Existing Peak Hour Traffic

**AM Peak**

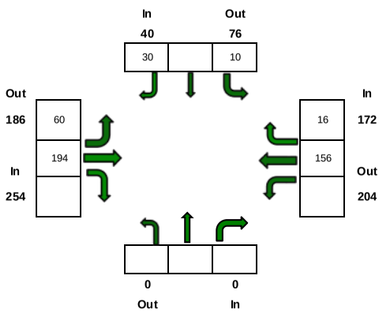


**Evening Peak**

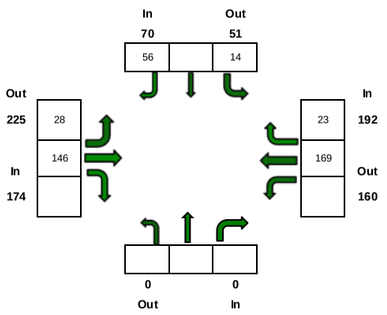


### Daily Volumes

| Leg | Existing | 2016 Background | 2040 Background | Assignment | 2016 Total | 2040 Total |
|---|---|---|---|---|---|---|
| North | | | | 100 | | |
| South | | | | | | |
| East | 3,766 | 3,840 | 4,880 | 100 | 3,940 | 4,980 |
| West | | | | 33 | | |

### 2016 Background Peak Hour Traffic

**AM Peak**

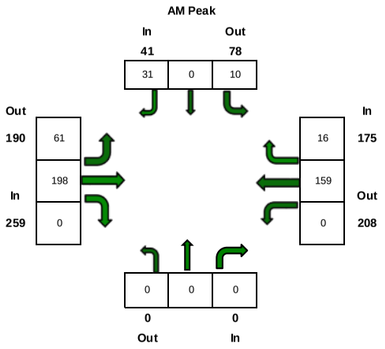


**Evening Peak**

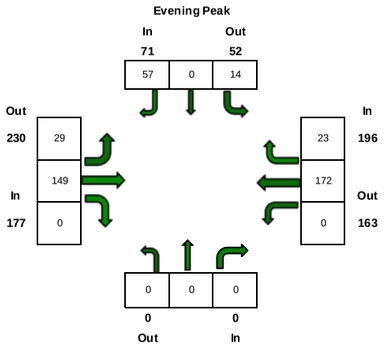


### 2040 Background Peak Hour Traffic

**AM Peak**

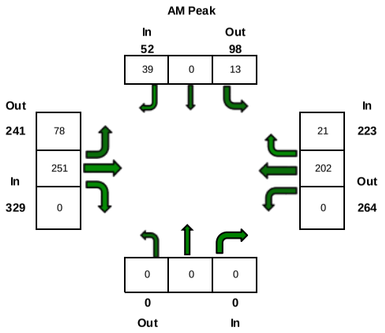


**Evening Peak**

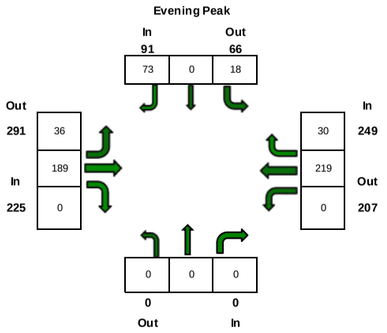


### Short Term and Long Term Assignment

**AM Peak**

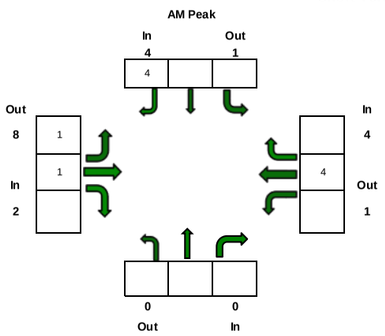


**Evening Peak**

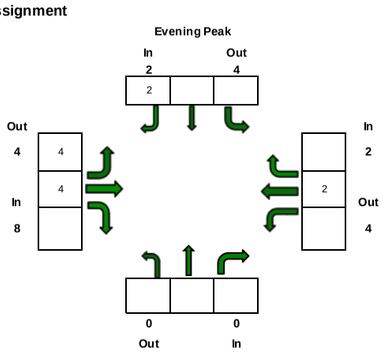


### 2016 Total Peak Hour Traffic

**AM Peak**

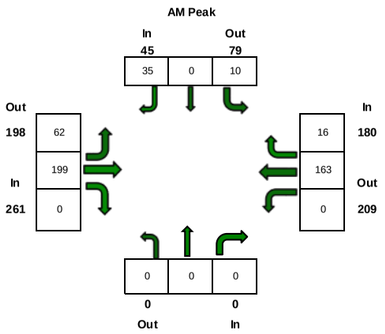


**Evening Peak**

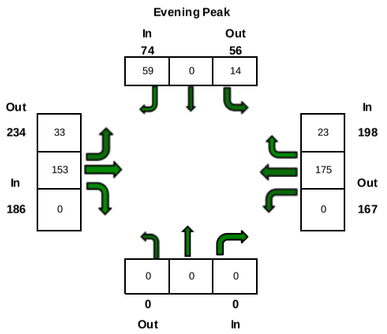


### 2040 Total Peak Hour Traffic

**AM Peak**

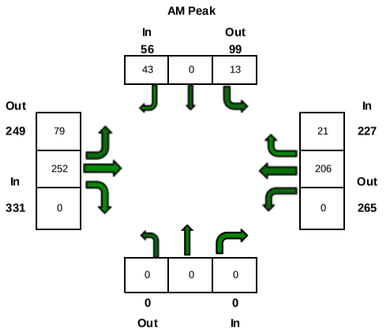


**Evening Peak**

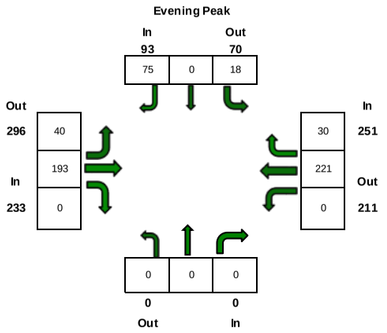

## Figure 8. 21st Street / Jasper Drive Traffic Volume Scenarios

### Existing Peak Hour Traffic

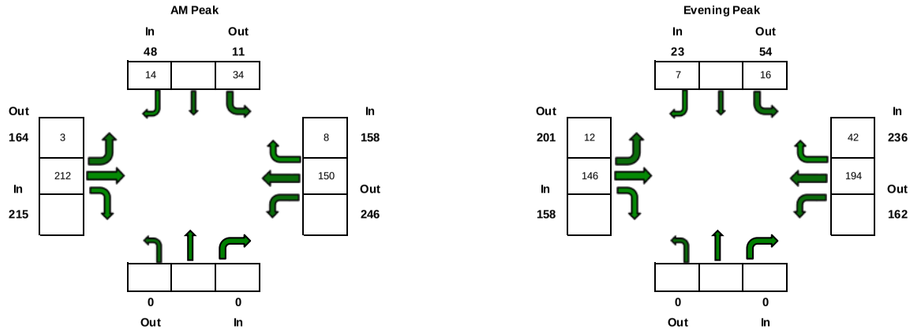


### Daily Volumes

| Leg | Existing | 2016 Background | 2040 Background | Assignment | 2016 Total | 2040 Total |
|---|---|---|---|---|---|---|
| North | | 0 | 0 | 167 | | |
| South | | 0 | 0 | | | |
| East | | 0 | 0 | 134 | | |
| West | 3,766 | 3,880 | 4,880 | 33 | 3,910 | 4,910 |

### 2016 Background Peak Hour Traffic

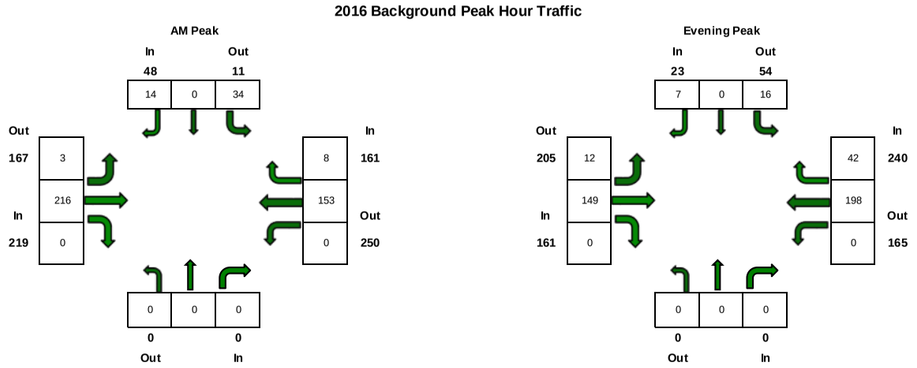


### 2040 Background Peak Hour Traffic

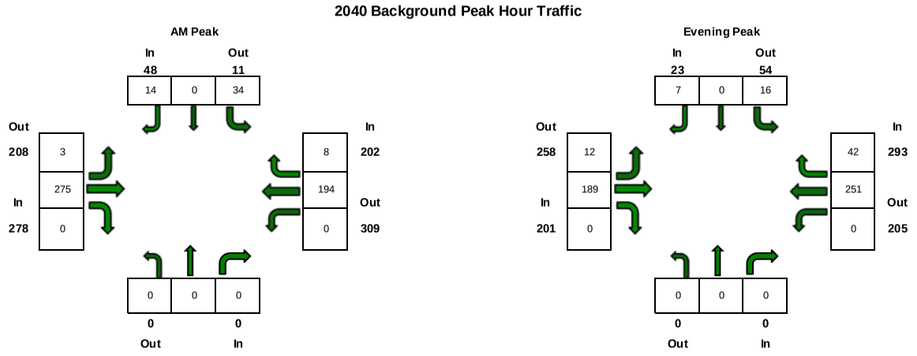


### Short Term and Long Term Assignment

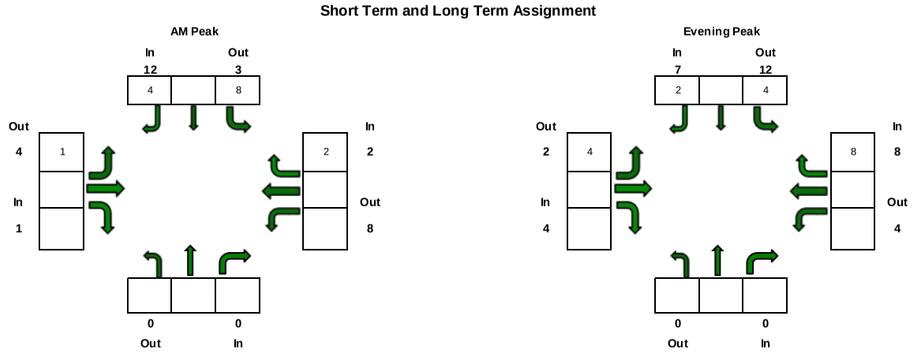


### 2016 Total Peak Hour Traffic

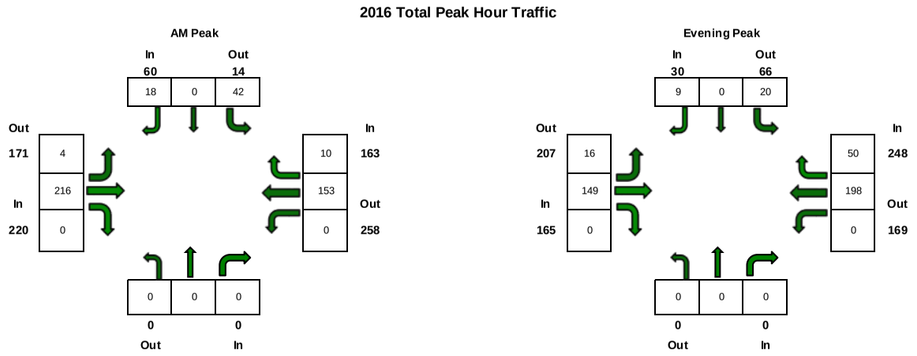


### 2040 Total Peak Hour Traffic

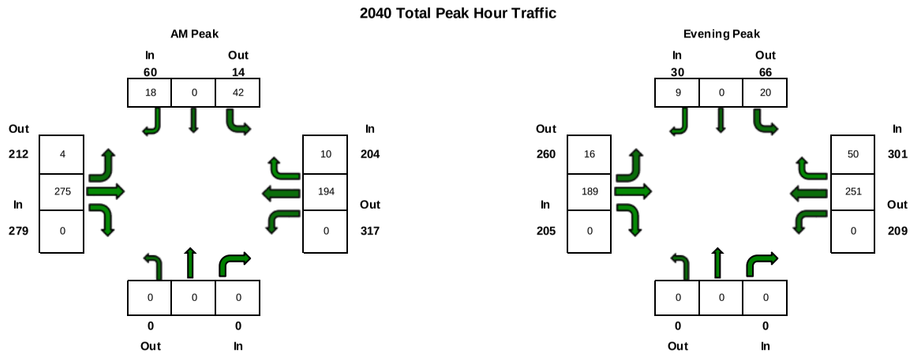

# Appendix A

Traffic Count Data

LOCATION 15TH STREET / MISSOURI AVENUE

DATE December 10, 2014

| Start Time | 15TH STREET Eastbound | | | | 15TH STREET Westbound | | | | MISSOURI AVENUE Northbound | | | | MISSOURI AVENUE Southbound | | | |
|---|---|---|---|---|---|---|---|---|---|---|---|---|---|---|---|---|
| | Left | Thru | Right | Peds | Left | Thru | Right | Peds | Left | Thru | Right | Peds | Left | Thru | Right | Peds |
| 07:15 AM | 3 | 51 | 2 | 0 | 4 | 85 | 0 | 1 | 28 | 1 | 25 | 0 | 0 | 1 | 1 | 0 |
| 07:30 AM | 0 | 76 | 3 | 0 | 15 | 104 | 5 | 0 | 29 | 4 | 26 | 0 | 1 | 2 | 2 | 0 |
| 07:45 AM | 3 | 97 | 10 | 0 | 13 | 88 | 0 | 0 | 35 | 1 | 34 | 0 | 1 | 3 | 1 | 0 |
| 08:00 AM | 1 | 76 | 5 | 0 | 11 | 52 | 5 | 0 | 20 | 0 | 26 | 0 | 1 | 1 | 1 | 0 |
| **Totals** | **7** | **300** | **20** | **0** | **43** | **329** | **10** | **1** | **112** | **6** | **111** | **0** | **3** | **7** | **5** | **0** |
| **PHF** | **0.74** | | | | **0.77** | | | | **0.82** | | | | **0.75** | | | |

| Start Time | 15TH STREET Eastbound | | | | 15TH STREET Westbound | | | | MISSOURI AVENUE Northbound | | | | MISSOURI AVENUE Southbound | | | |
|---|---|---|---|---|---|---|---|---|---|---|---|---|---|---|---|---|
| | Left | Thru | Right | Peds | Left | Thru | Right | Peds | Left | Thru | Right | Peds | Left | Thru | Right | Peds |
| 04:45 PM | 1 | 94 | 24 | 0 | 29 | 74 | 3 | 0 | 17 | 3 | 14 | 0 | 3 | 2 | 2 | 0 |
| 05:00 PM | 0 | 113 | 19 | 0 | 36 | 68 | 1 | 1 | 13 | 2 | 19 | 0 | 0 | 4 | 2 | 0 |
| 05:15 PM | 2 | 131 | 21 | 0 | 32 | 71 | 2 | 0 | 14 | 0 | 18 | 0 | 0 | 2 | 1 | 0 |
| 05:30 PM | 0 | 103 | 16 | 0 | 42 | 78 | 3 | 0 | 9 | 3 | 17 | 0 | 1 | 2 | 0 | 0 |
| **Totals** | **3** | **441** | **80** | **0** | **139** | **291** | **9** | **1** | **53** | **8** | **68** | **0** | **4** | **10** | **5** | **0** |
| **PHF** | **0.85** | | | | **0.89** | | | | **0.95** | | | | **0.68** | | | |

LOCATION 15 TH STREET / PINYON PARKWAY

DATE December 10, 2014

| Start Time | 15TH STREET Eastbound | | | | 15 TH STREET Westbound | | | | PINYON PARKWAY Northbound | | | |
|---|---|---|---|---|---|---|---|---|---|---|---|---|
| | Left | Thru | Right | Peds | Left | Thru | Right | Peds | Left | Thru | Right | Peds |
| 07:30 AM | 0 | 71 | 0 | 0 | 1 | 108 | 0 | 0 | 1 | 0 | 0 | 0 |
| 07:45 AM | 0 | 98 | 0 | 0 | 1 | 124 | 0 | 0 | 0 | 0 | 0 | 0 |
| 08:00 AM | 0 | 94 | 7 | 0 | 3 | 72 | 0 | 0 | 1 | 0 | 2 | 0 |
| 08:15 AM | 0 | 86 | 0 | 0 | 3 | 60 | 0 | 0 | 1 | 0 | 4 | 0 |
| **Totals** | **0** | **349** | **7** | **0** | **8** | **364** | **0** | **0** | **3** | **0** | **6** | **0** |
| **PHF** | **0.88** | | | | **0.74** | | | | **0.45** | | | |

| Start Time | 15TH STREET Eastbound | | | | 15 TH STREET Westbound | | | | PINYON PARKWAY Northbound | | | |
|---|---|---|---|---|---|---|---|---|---|---|---|---|
| | Left | Thru | Right | Peds | Left | Thru | Right | Peds | Left | Thru | Right | Peds |
| 05:00 PM | 0 | 118 | 1 | 0 | 1 | 91 | 0 | 0 | 0 | 0 | 0 | 0 |
| 05:15 PM | 0 | 131 | 0 | 0 | 2 | 104 | 0 | 0 | 0 | 0 | 3 | 0 |
| 05:30 PM | 0 | 114 | 2 | 0 | 0 | 108 | 0 | 0 | 1 | 0 | 0 | 0 |
| 05:45 PM | 0 | 117 | 2 | 0 | 1 | 86 | 0 | 0 | 1 | 0 | 2 | 0 |
| **Totals** | **0** | **480** | **5** | **0** | **4** | **389** | **0** | **0** | **2** | **0** | **5** | **0** |
| **PHF** | **0.93** | | | | **0.91** | | | | **0.58** | | | |

LOCATION 21ST STREET / MISSOURI AVENUE

DATE December 11, 2014

| Start Time | 21ST STREET Eastbound | | | | 21ST STREET Westbound | | | | MISSOURI AVENUE Southbound | | | |
|---|---|---|---|---|---|---|---|---|---|---|---|---|
| | Left | Thru | Right | Peds | Left | Thru | Right | Peds | Left | Thru | Right | Peds |
| 07:30 AM | 17 | 52 | 0 | 0 | 0 | 33 | 3 | 0 | 3 | 0 | 8 | 0 |
| 07:45 AM | 13 | 56 | 0 | 0 | 0 | 56 | 4 | 0 | 2 | 0 | 7 | 0 |
| 08:00 AM | 13 | 48 | 0 | 0 | 0 | 32 | 3 | 0 | 2 | 0 | 5 | 0 |
| 08:15 AM | 17 | 38 | 0 | 0 | 0 | 35 | 6 | 0 | 3 | 0 | 10 | 0 |
| **Totals** | **60** | **194** | **0** | **0** | **0** | **156** | **16** | **0** | **10** | **0** | **30** | **0** |
| **PHF** | **0.92** | | | | **0.72** | | | | **0.77** | | | |

| Start Time | 21ST STREET Eastbound | | | | 21ST STREET Westbound | | | | MISSOURI AVENUE Southbound | | | |
|---|---|---|---|---|---|---|---|---|---|---|---|---|
| | Left | Thru | Right | Peds | Left | Thru | Right | Peds | Left | Thru | Right | Peds |
| 04:30 PM | 7 | 33 | 0 | 0 | 0 | 43 | 5 | 0 | 4 | 0 | 10 | 0 |
| 04:45 PM | 10 | 34 | 0 | 0 | 0 | 38 | 4 | 0 | 2 | 0 | 20 | 0 |
| 05:00 PM | 8 | 42 | 0 | 0 | 0 | 48 | 6 | 0 | 3 | 0 | 11 | 0 |
| 05:15 PM | 3 | 37 | 0 | 0 | 0 | 40 | 8 | 0 | 5 | 0 | 15 | 0 |
| **Totals** | **28** | **146** | **0** | **0** | **0** | **169** | **23** | **0** | **14** | **0** | **56** | **0** |
| **PHF** | **0.87** | | | | **0.89** | | | | **0.80** | | | |

LOCATION 21ST STREET / JASPER DRIVE

DATE December 11, 2014

| Start Time | 21ST STREET Eastbound | | | | 21 ST STREET Westbound | | | | JASPER DRIVE Southbound | | | |
|---|---|---|---|---|---|---|---|---|---|---|---|---|
| | Left | Thru | Right | Peds | Left | Thru | Right | Peds | Left | Thru | Right | Peds |
| 07:30 AM | 1 | 57 | 0 | 0 | 0 | 30 | 2 | 0 | 13 | 0 | 4 | 0 |
| 07:45 AM | 0 | 64 | 0 | 0 | 0 | 49 | 0 | 0 | 12 | 0 | 2 | 0 |
| 08:00 AM | 1 | 50 | 0 | 0 | 0 | 36 | 3 | 0 | 6 | 0 | 4 | 0 |
| 08:15 AM | 1 | 41 | 0 | 0 | 0 | 35 | 3 | 0 | 3 | 0 | 4 | 0 |
| **Totals** | **3** | **212** | **0** | **0** | **0** | **150** | **8** | **0** | **34** | **0** | **14** | **0** |
| **PHF** | **0.84** | | | | **0.81** | | | | **0.71** | | | |

| Start Time | 21ST STREET Eastbound | | | | 21 ST STREET Westbound | | | | JASPER DRIVE Southbound | | | |
|---|---|---|---|---|---|---|---|---|---|---|---|---|
| | Left | Thru | Right | Peds | Left | Thru | Right | Peds | Left | Thru | Right | Peds |
| 05:00 PM | 4 | 40 | 0 | 0 | 0 | 54 | 8 | 0 | 7 | 0 | 2 | 0 |
| 05:15 PM | 5 | 38 | 0 | 0 | 0 | 45 | 7 | 0 | 4 | 0 | 1 | 0 |
| 05:30 PM | 2 | 34 | 0 | 0 | 0 | 48 | 16 | 0 | 3 | 0 | 1 | 0 |
| 05:45 PM | 1 | 34 | 1 | 0 | 0 | 47 | 11 | 0 | 2 | 0 | 3 | 0 |
| **Totals** | **12** | **146** | **1** | **0** | **0** | **194** | **42** | **0** | **16** | **0** | **7** | **0** |
| **PHF** | **0.90** | | | | **0.92** | | | | **0.64** | | | |

LOCATION MISSOURI AVENUE / PINYON PARKWAY

DATE December 10, 2014

| Start Time | PINYON PARKWAY Westbound | | | | MISSOURI AVENUE Northbound | | | | MISSOURI AVENUE Southbound | | | |
|---|---|---|---|---|---|---|---|---|---|---|---|---|
| | Left | Thru | Right | Peds | Left | Thru | Right | Peds | Left | Thru | Right | Peds |
| 07:15 AM | 1 | 0 | 16 | 2 | 0 | 16 | 2 | 0 | 2 | 2 | 0 | 0 |
| 07:30 AM | 0 | 0 | 20 | 0 | 0 | 13 | 1 | 0 | 4 | 8 | 0 | 0 |
| 07:45 AM | 1 | 0 | 24 | 0 | 0 | 23 | 0 | 0 | 5 | 14 | 0 | 0 |
| 08:00 AM | 1 | 0 | 11 | 0 | 0 | 18 | 0 | 0 | 4 | 14 | 0 | 0 |
| **Totals** | **3** | **0** | **71** | **2** | **0** | **70** | **3** | **0** | **15** | **38** | **0** | **0** |
| **PHF** | **0.74** | | | | **0.79** | | | | **0.70** | | | |

| Start Time | PINYON PARKWAY Westbound | | | | MISSOURI AVENUE Northbound | | | | MISSOURI AVENUE Southbound | | | |
|---|---|---|---|---|---|---|---|---|---|---|---|---|
| | Left | Thru | Right | Peds | Left | Thru | Right | Peds | Left | Thru | Right | Peds |
| 04:45 PM | 0 | 0 | 1 | 0 | 0 | 19 | 0 | 0 | 12 | 26 | 0 | 0 |
| 05:00 PM | 0 | 1 | 5 | 0 | 0 | 18 | 3 | 0 | 28 | 24 | 0 | 0 |
| 05:15 PM | 0 | 0 | 6 | 0 | 0 | 13 | 0 | 0 | 13 | 9 | 0 | 0 |
| 05:30 PM | 1 | 0 | 9 | 0 | 0 | 8 | 2 | 0 | 14 | 21 | 0 | 0 |
| **Totals** | **1** | **1** | **21** | **0** | **0** | **58** | **5** | **0** | **67** | **80** | **0** | **0** |
| **PHF** | **0.58** | | | | **0.75** | | | | **0.71** | | | |

15th &:
pinion:
e.b.:

Site: 15th and pinion
Date: 12/9/2014
Tuesday

# 24 Hour Volume, per Channel

| Interval Begin | e.b. |
|---|---|
| 3:00 PM | 254 |
| 4:00 PM | 413 |
| 5:00 PM | 386 |
| 6:00 PM | 453 |
| 7:00 PM | 265 |
| 8:00 PM | 176 |
| 9:00 PM | 145 |
| 10:00 PM | 92 |
| 11:00 PM | 62 |
| 12/10/2014 | |
| 12:00 AM | 30 |
| 1:00 AM | 8 |
| 2:00 AM | 8 |
| 3:00 AM | 7 |
| 4:00 AM | 17 |
| 5:00 AM | 39 |
| 6:00 AM | 59 |
| 7:00 AM | 111 |
| 8:00 AM | 249 |
| 9:00 AM | 285 |
| 10:00 AM | 199 |
| 11:00 AM | 187 |
| 12:00 PM | 268 |
| 1:00 PM | 259 |
| 2:00 PM | 246 |
| Totals | 4218 |

## Peak Hours

| | |
|---|---|
| 12:00 AM - 12:00 PM | 8:30 AM |
| Volume | 332 |
| Factor | 0.75 |
| 12:00 PM - 12:00 AM | 5:45 PM |
| Volume | 478 |
| Factor | 0.74 |

15th &:
pinion:
e.b.:

Site: 15th and pinion
Date: 12/10/2014
Wednesday

# 24 Hour Volume, per Channel

| Interval Begin | e.b. |
|---|---|
| 3:00 PM | 252 |
| 4:00 PM | 427 |
| 5:00 PM | 350 |
| 6:00 PM | 475 |
| 7:00 PM | 251 |
| 8:00 PM | 188 |
| 9:00 PM | 137 |
| 10:00 PM | 73 |
| 11:00 PM | 47 |
| 12/11/2014 | |
| 12:00 AM | 15 |
| 1:00 AM | 9 |
| 2:00 AM | 7 |
| 3:00 AM | 4 |
| 4:00 AM | 6 |
| 5:00 AM | 20 |
| 6:00 AM | 47 |
| 7:00 AM | 73 |
| 8:00 AM | 203 |
| 9:00 AM | 261 |
| 10:00 AM | 47 |
| Totals | 2892 |

## Peak Hours

| | |
|---|---|
| 12:00 AM - 12:00 PM | 8:45 AM |
| Volume | 300 |
| Factor | 0.74 |
| 12:00 PM - 12:00 AM | 6:05 PM |
| Volume | 476 |
| Factor | 0.84 |

15th &:
pinion:
e.b.:

Site: 15th and pinion
Date: 12/9/2014
Tuesday

24 Hour Speed
Channel: e.b.

| mph | Total | 0 - < 15 | 15 - < 20 | 20 - < 25 | 25 - < 30 | 30 - < 35 | 35 - < 40 | 40 - < 45 | 45 - < 50 | 50 - < 55 | 55 - < 60 | 60 - < 65 | 65 - < 70 | 70 - < 200 |
|---|---|---|---|---|---|---|---|---|---|---|---|---|---|---|
| 3:00 PM | 254 | 0 | 0 | 0 | 10 | 134 | 98 | 9 | 3 | 0 | 0 | 0 | 0 | 0 |
| 4:00 PM | 413 | 0 | 1 | 11 | 85 | 213 | 96 | 7 | 0 | 0 | 0 | 0 | 0 | 0 |
| 5:00 PM | 386 | 0 | 0 | 1 | 49 | 233 | 96 | 6 | 1 | 0 | 0 | 0 | 0 | 0 |
| 6:00 PM | 453 | 0 | 0 | 1 | 85 | 285 | 75 | 7 | 0 | 0 | 0 | 0 | 0 | 0 |
| 7:00 PM | 265 | 0 | 0 | 0 | 29 | 174 | 57 | 5 | 0 | 0 | 0 | 0 | 0 | 0 |
| 8:00 PM | 176 | 0 | 0 | 0 | 25 | 106 | 44 | 1 | 0 | 0 | 0 | 0 | 0 | 0 |
| 9:00 PM | 145 | 0 | 0 | 0 | 20 | 89 | 32 | 4 | 0 | 0 | 0 | 0 | 0 | 0 |
| 10:00 PM | 92 | 0 | 0 | 1 | 11 | 58 | 20 | 2 | 0 | 0 | 0 | 0 | 0 | 0 |
| 11:00 PM | 62 | 0 | 0 | 0 | 4 | 36 | 22 | 0 | 0 | 0 | 0 | 0 | 0 | 0 |
| 12/10/2014 | | | | | | | | | | | | | | |
| 12:00 AM | 30 | 0 | 0 | 1 | 2 | 16 | 9 | 0 | 1 | 1 | 0 | 0 | 0 | 0 |
| 1:00 AM | 8 | 0 | 0 | 0 | 1 | 4 | 1 | 0 | 1 | 0 | 1 | 0 | 0 | 0 |
| 2:00 AM | 8 | 0 | 0 | 1 | 1 | 5 | 0 | 1 | 0 | 0 | 0 | 0 | 0 | 0 |
| 3:00 AM | 7 | 0 | 0 | 0 | 1 | 2 | 3 | 1 | 0 | 0 | 0 | 0 | 0 | 0 |
| 4:00 AM | 17 | 0 | 0 | 1 | 0 | 7 | 5 | 3 | 1 | 0 | 0 | 0 | 0 | 0 |
| 5:00 AM | 39 | 0 | 0 | 0 | 5 | 28 | 4 | 2 | 0 | 0 | 0 | 0 | 0 | 0 |
| 6:00 AM | 59 | 0 | 0 | 0 | 3 | 30 | 23 | 2 | 1 | 0 | 0 | 0 | 0 | 0 |
| 7:00 AM | 111 | 0 | 0 | 0 | 14 | 71 | 21 | 4 | 1 | 0 | 0 | 0 | 0 | 0 |
| 8:00 AM | 249 | 1 | 0 | 1 | 54 | 155 | 35 | 3 | 0 | 0 | 0 | 0 | 0 | 0 |
| 9:00 AM | 285 | 3 | 1 | 1 | 78 | 161 | 37 | 3 | 1 | 0 | 0 | 0 | 0 | 0 |
| 10:00 AM | 199 | 0 | 0 | 1 | 17 | 122 | 52 | 6 | 1 | 0 | 0 | 0 | 0 | 0 |
| 11:00 AM | 187 | 0 | 0 | 1 | 17 | 104 | 60 | 5 | 0 | 0 | 0 | 0 | 0 | 0 |
| 12:00 PM | 268 | 0 | 0 | 1 | 41 | 156 | 63 | 7 | 0 | 0 | 0 | 0 | 0 | 0 |
| 1:00 PM | 259 | 0 | 0 | 0 | 34 | 133 | 80 | 12 | 0 | 0 | 0 | 0 | 0 | 0 |
| 2:00 PM | 246 | 1 | 1 | 2 | 25 | 113 | 93 | 11 | 0 | 0 | 0 | 0 | 0 | 0 |
| Total | 4218 | 5 | 3 | 24 | 611 | 2435 | 1026 | 101 | 11 | 1 | 1 | 0 | 0 | 0 |
| % | | 0.1 | 0.1 | 0.6 | 14.5 | 57.7 | 24.3 | 2.4 | 0.3 | 0.0 | 0.0 | 0.0 | 0.0 | 0.0 |

| Percentile Speeds (mph) | 10 % | 15 % | 50 % | 85 % | 90 % |
|---|---|---|---|---|---|
| | 29.2 | 29.9 | 33.1 | 36.5 | 37.5 |

| | | | |
|---|---|---|---|
| 10 mph Pace Speed | 28.2 - 38.2 | Average | 33.2 mph |
| Number in Pace | 3697 (87.6 %) | Minimum | 6.8 mph |
| | | Maximum | 57.5 mph |

| Speeds Exceeded | 45 mph | 55 mph | 65 mph |
|---|---|---|---|
| | 0.3 % | 0.0 % | 0.0 % |
| Count | 13 | 1 | 0 |

15th &:
pinion:
e.b.:

Site: 15th and pinion
Date: 12/10/2014
Wednesday

24 Hour Speed
Channel: e.b.

| mph | Total | 0 - < 15 | 15 - < 20 | 20 - < 25 | 25 - < 30 | 30 - < 35 | 35 - < 40 | 40 - < 45 | 45 - < 50 | 50 - < 55 | 55 - < 60 | 60 - < 65 | 65 - < 70 | 70 - < 200 |
|---|---|---|---|---|---|---|---|---|---|---|---|---|---|---|
| 3:00 PM | 252 | 0 | 0 | 2 | 19 | 149 | 75 | 7 | 0 | 0 | 0 | 0 | 0 | 0 |
| 4:00 PM | 427 | 0 | 0 | 3 | 75 | 246 | 95 | 6 | 2 | 0 | 0 | 0 | 0 | 0 |
| 5:00 PM | 350 | 0 | 0 | 0 | 35 | 226 | 80 | 9 | 0 | 0 | 0 | 0 | 0 | 0 |
| 6:00 PM | 475 | 0 | 0 | 0 | 73 | 313 | 82 | 7 | 0 | 0 | 0 | 0 | 0 | 0 |
| 7:00 PM | 251 | 1 | 3 | 0 | 23 | 160 | 61 | 2 | 1 | 0 | 0 | 0 | 0 | 0 |
| 8:00 PM | 188 | 1 | 0 | 0 | 20 | 124 | 40 | 3 | 0 | 0 | 0 | 0 | 0 | 0 |
| 9:00 PM | 137 | 0 | 1 | 0 | 4 | 98 | 30 | 3 | 0 | 0 | 1 | 0 | 0 | 0 |
| 10:00 PM | 73 | 0 | 0 | 0 | 4 | 45 | 23 | 1 | 0 | 0 | 0 | 0 | 0 | 0 |
| 11:00 PM | 47 | 0 | 0 | 0 | 0 | 27 | 17 | 3 | 0 | 0 | 0 | 0 | 0 | 0 |
| 12/11/2014 | | | | | | | | | | | | | | |
| 12:00 AM | 15 | 0 | 0 | 0 | 1 | 9 | 4 | 1 | 0 | 0 | 0 | 0 | 0 | 0 |
| 1:00 AM | 9 | 0 | 0 | 0 | 0 | 6 | 2 | 1 | 0 | 0 | 0 | 0 | 0 | 0 |
| 2:00 AM | 7 | 0 | 0 | 0 | 1 | 3 | 3 | 0 | 0 | 0 | 0 | 0 | 0 | 0 |
| 3:00 AM | 4 | 0 | 0 | 0 | 0 | 0 | 1 | 2 | 0 | 1 | 0 | 0 | 0 | 0 |
| 4:00 AM | 6 | 0 | 0 | 0 | 0 | 4 | 2 | 0 | 0 | 0 | 0 | 0 | 0 | 0 |
| 5:00 AM | 20 | 0 | 0 | 0 | 0 | 11 | 7 | 2 | 0 | 0 | 0 | 0 | 0 | 0 |
| 6:00 AM | 47 | 0 | 0 | 0 | 1 | 23 | 19 | 4 | 0 | 0 | 0 | 0 | 0 | 0 |
| 7:00 AM | 73 | 0 | 0 | 0 | 4 | 40 | 20 | 8 | 1 | 0 | 0 | 0 | 0 | 0 |
| 8:00 AM | 203 | 3 | 1 | 0 | 21 | 117 | 55 | 5 | 0 | 1 | 0 | 0 | 0 | 0 |
| 9:00 AM | 261 | 0 | 2 | 0 | 39 | 173 | 41 | 5 | 0 | 1 | 0 | 0 | 0 | 0 |
| 10:00 AM | 47 | 0 | 0 | 1 | 3 | 29 | 9 | 5 | 0 | 0 | 0 | 0 | 0 | 0 |
| 11:00 AM | - | - | - | - | - | - | - | - | - | - | - | - | - | - |
| 12:00 PM | - | - | - | - | - | - | - | - | - | - | - | - | - | - |
| 1:00 PM | - | - | - | - | - | - | - | - | - | - | - | - | - | - |
| 2:00 PM | - | - | - | - | - | - | - | - | - | - | - | - | - | - |
| Total | 2892 | 5 | 7 | 6 | 323 | 1803 | 666 | 74 | 4 | 3 | 1 | 0 | 0 | 0 |
| % | | 0.2 | 0.2 | 0.2 | 11.2 | 62.3 | 23.0 | 2.6 | 0.1 | 0.1 | 0.0 | 0.0 | 0.0 | 0.0 |

| Percentile Speeds | 10 % | 15 % | 50 % | 85 % | 90 % |
|---|---|---|---|---|---|
| (mph) | 29.6 | 30.3 | 33.1 | 36.4 | 37.4 |

| | | | |
|---|---|---|---|
| 10 mph Pace Speed | 28.0 - 38.0 | Average | 33.3 mph |
| Number in Pace | 2590 (89.6 %) | Minimum | 12.4 mph |
| | | Maximum | 55.4 mph |

| Speeds Exceeded | 45 mph | 55 mph | 65 mph |
|---|---|---|---|
| | 0.3 % | 0.0 % | 0.0 % |
| Count | 8 | 1 | 0 |

15th &:
pinion:
w.b.:

Site: 15th & pinion w.b.
Date: 12/9/2014
Tuesday

# 24 Hour Volume, per Channel

| Interval Begin | w.b. |
|---|---|
| 3:00 PM | 268 |
| 4:00 PM | 292 |
| 5:00 PM | 322 |
| 6:00 PM | 375 |
| 7:00 PM | 296 |
| 8:00 PM | 194 |
| 9:00 PM | 140 |
| 10:00 PM | 110 |
| 11:00 PM | 78 |
| 12/10/2014 | |
| 12:00 AM | 28 |
| 1:00 AM | 15 |
| 2:00 AM | 7 |
| 3:00 AM | 9 |
| 4:00 AM | 7 |
| 5:00 AM | 18 |
| 6:00 AM | 42 |
| 7:00 AM | 97 |
| 8:00 AM | 357 |
| 9:00 AM | 253 |
| 10:00 AM | 204 |
| 11:00 AM | 201 |
| 12:00 PM | 210 |
| 1:00 PM | 274 |
| 2:00 PM | 260 |
| Totals | 4057 |

## Peak Hours

| | |
|---|---|
| 12:00 AM - 12:00 PM | 8:20 AM |
| Volume | 393 |
| Factor | 0.63 |
| 12:00 PM - 12:00 AM | 5:55 PM |
| Volume | 382 |
| Factor | 0.66 |

15th &:
pinion:
w.b.:

Site: 15th & pinion w.b.
Date: 12/10/2014
Wednesday

# 24 Hour Volume, per Channel

| Interval Begin | w.b. |
|---|---|
| 3:00 PM | 284 |
| 4:00 PM | 325 |
| 5:00 PM | 345 |
| 6:00 PM | 386 |
| 7:00 PM | 279 |
| 8:00 PM | 215 |
| 9:00 PM | 170 |
| 10:00 PM | 110 |
| 11:00 PM | 72 |
| 12/11/2014 | |
| 12:00 AM | 36 |
| 1:00 AM | 17 |
| 2:00 AM | 4 |
| 3:00 AM | 3 |
| 4:00 AM | 7 |
| 5:00 AM | 11 |
| 6:00 AM | 34 |
| 7:00 AM | 97 |
| 8:00 AM | 327 |
| 9:00 AM | 265 |
| 10:00 AM | 73 |
| Totals | 3060 |

## Peak Hours

| | |
|---|---|
| 12:00 AM - 12:00 PM | 8:25 AM |
| Volume | 376 |
| Factor | 0.68 |
| 12:00 PM - 12:00 AM | 5:55 PM |
| Volume | 399 |
| Factor | 0.83 |

15th &:
pinion:
w.b.:

Site: 15th & pinion w.b.
Date: 12/9/2014
Tuesday

24 Hour Speed
Channel: w.b.

| mph | Total | 0 - < 15 | 15 - < 20 | 20 - < 25 | 25 - < 30 | 30 - < 35 | 35 - < 40 | 40 - < 45 | 45 - < 50 | 50 - < 55 | 55 - < 60 | 60 - < 65 | 65 - < 70 | 70 - < 200 |
|---|---|---|---|---|---|---|---|---|---|---|---|---|---|---|
| 3:00 PM | 268 | 0 | 0 | 1 | 7 | 63 | 143 | 51 | 3 | 0 | 0 | 0 | 0 | 0 |
| 4:00 PM | 292 | 1 | 1 | 5 | 38 | 120 | 107 | 20 | 0 | 0 | 0 | 0 | 0 | 0 |
| 5:00 PM | 322 | 0 | 0 | 1 | 8 | 131 | 149 | 29 | 4 | 0 | 0 | 0 | 0 | 0 |
| 6:00 PM | 375 | 0 | 0 | 7 | 16 | 166 | 157 | 25 | 4 | 0 | 0 | 0 | 0 | 0 |
| 7:00 PM | 296 | 0 | 0 | 1 | 8 | 122 | 139 | 23 | 3 | 0 | 0 | 0 | 0 | 0 |
| 8:00 PM | 194 | 0 | 1 | 0 | 9 | 79 | 92 | 13 | 0 | 0 | 0 | 0 | 0 | 0 |
| 9:00 PM | 140 | 0 | 0 | 1 | 13 | 58 | 59 | 9 | 0 | 0 | 0 | 0 | 0 | 0 |
| 10:00 PM | 110 | 0 | 0 | 3 | 8 | 48 | 40 | 11 | 0 | 0 | 0 | 0 | 0 | 0 |
| 11:00 PM | 78 | 0 | 0 | 0 | 1 | 27 | 41 | 7 | 2 | 0 | 0 | 0 | 0 | 0 |
| 12/10/2014 | | | | | | | | | | | | | | |
| 12:00 AM | 28 | 0 | 0 | 0 | 4 | 8 | 10 | 6 | 0 | 0 | 0 | 0 | 0 | 0 |
| 1:00 AM | 15 | 0 | 0 | 0 | 0 | 6 | 5 | 4 | 0 | 0 | 0 | 0 | 0 | 0 |
| 2:00 AM | 7 | 0 | 0 | 0 | 0 | 3 | 2 | 2 | 0 | 0 | 0 | 0 | 0 | 0 |
| 3:00 AM | 9 | 0 | 0 | 0 | 1 | 2 | 1 | 3 | 0 | 1 | 0 | 0 | 1 | 0 |
| 4:00 AM | 7 | 0 | 0 | 0 | 1 | 3 | 3 | 0 | 0 | 0 | 0 | 0 | 0 | 0 |
| 5:00 AM | 18 | 0 | 0 | 0 | 2 | 5 | 8 | 3 | 0 | 0 | 0 | 0 | 0 | 0 |
| 6:00 AM | 42 | 0 | 0 | 0 | 2 | 15 | 21 | 4 | 0 | 0 | 0 | 0 | 0 | 0 |
| 7:00 AM | 97 | 0 | 0 | 0 | 4 | 31 | 52 | 9 | 1 | 0 | 0 | 0 | 0 | 0 |
| 8:00 AM | 357 | 1 | 1 | 0 | 16 | 176 | 141 | 22 | 0 | 0 | 0 | 0 | 0 | 0 |
| 9:00 AM | 253 | 0 | 0 | 1 | 35 | 119 | 86 | 12 | 0 | 0 | 0 | 0 | 0 | 0 |
| 10:00 AM | 204 | 1 | 0 | 3 | 7 | 54 | 100 | 36 | 2 | 1 | 0 | 0 | 0 | 0 |
| 11:00 AM | 201 | 0 | 0 | 0 | 1 | 50 | 104 | 42 | 3 | 1 | 0 | 0 | 0 | 0 |
| 12:00 PM | 210 | 1 | 1 | 1 | 14 | 79 | 95 | 18 | 1 | 0 | 0 | 0 | 0 | 0 |
| 1:00 PM | 274 | 0 | 2 | 1 | 11 | 84 | 125 | 45 | 5 | 1 | 0 | 0 | 0 | 0 |
| 2:00 PM | 260 | 0 | 0 | 0 | 4 | 50 | 154 | 42 | 10 | 0 | 0 | 0 | 0 | 0 |
| Total | 4057 | 4 | 6 | 25 | 210 | 1499 | 1834 | 436 | 38 | 4 | 0 | 0 | 1 | 0 |
| % | | 0.1 | 0.1 | 0.6 | 5.2 | 36.9 | 45.2 | 10.7 | 0.9 | 0.1 | 0.0 | 0.0 | 0.0 | 0.0 |

| Percentile Speeds | 10 % | 15 % | 50 % | 85 % | 90 % |
|---|---|---|---|---|---|
| (mph) | 31.2 | 32.2 | 35.7 | 39.4 | 40.3 |

| | | | |
|---|---|---|---|
| 10 mph Pace Speed | 30.5 - 40.5 | Average | 35.7 mph |
| Number in Pace | 3401 (83.8 %) | Minimum | 11.8 mph |
| | | Maximum | 65.6 mph |

| Speeds Exceeded | 45 mph | 55 mph | 65 mph |
|---|---|---|---|
| | 1.1 % | 0.0 % | 0.0 % |
| Count | 43 | 1 | 1 |

15th &:
pinion:
w.b.:

Site: 15th & pinion w.b.
Date: 12/10/2014
Wednesday

24 Hour Speed
Channel: w.b.

| mph | Total | 0 - < 15 | 15 - < 20 | 20 - < 25 | 25 - < 30 | 30 - < 35 | 35 - < 40 | 40 - < 45 | 45 - < 50 | 50 - < 55 | 55 - < 60 | 60 - < 65 | 65 - < 70 | 70 - < 200 |
|---|---|---|---|---|---|---|---|---|---|---|---|---|---|---|
| 3:00 PM | 284 | 0 | 1 | 1 | 7 | 58 | 155 | 56 | 6 | 0 | 0 | 0 | 0 | 0 |
| 4:00 PM | 325 | 3 | 1 | 5 | 20 | 134 | 126 | 33 | 3 | 0 | 0 | 0 | 0 | 0 |
| 5:00 PM | 345 | 0 | 0 | 3 | 14 | 113 | 175 | 36 | 4 | 0 | 0 | 0 | 0 | 0 |
| 6:00 PM | 386 | 0 | 0 | 0 | 13 | 169 | 177 | 27 | 0 | 0 | 0 | 0 | 0 | 0 |
| 7:00 PM | 279 | 0 | 1 | 0 | 21 | 112 | 126 | 18 | 1 | 0 | 0 | 0 | 0 | 0 |
| 8:00 PM | 215 | 0 | 1 | 0 | 13 | 83 | 101 | 17 | 0 | 0 | 0 | 0 | 0 | 0 |
| 9:00 PM | 170 | 0 | 0 | 1 | 5 | 68 | 77 | 17 | 2 | 0 | 0 | 0 | 0 | 0 |
| 10:00 PM | 110 | 0 | 0 | 0 | 9 | 44 | 47 | 10 | 0 | 0 | 0 | 0 | 0 | 0 |
| 11:00 PM | 72 | 0 | 0 | 0 | 1 | 26 | 34 | 10 | 1 | 0 | 0 | 0 | 0 | 0 |
| 12/11/2014 | | | | | | | | | | | | | | |
| 12:00 AM | 36 | 0 | 0 | 1 | 0 | 15 | 14 | 3 | 3 | 0 | 0 | 0 | 0 | 0 |
| 1:00 AM | 17 | 0 | 0 | 0 | 0 | 7 | 7 | 2 | 1 | 0 | 0 | 0 | 0 | 0 |
| 2:00 AM | 4 | 0 | 0 | 0 | 0 | 1 | 3 | 0 | 0 | 0 | 0 | 0 | 0 | 0 |
| 3:00 AM | 3 | 0 | 0 | 0 | 0 | 2 | 1 | 0 | 0 | 0 | 0 | 0 | 0 | 0 |
| 4:00 AM | 7 | 0 | 0 | 0 | 0 | 4 | 1 | 2 | 0 | 0 | 0 | 0 | 0 | 0 |
| 5:00 AM | 11 | 0 | 0 | 0 | 0 | 4 | 4 | 1 | 1 | 1 | 0 | 0 | 0 | 0 |
| 6:00 AM | 34 | 0 | 0 | 0 | 2 | 11 | 17 | 4 | 0 | 0 | 0 | 0 | 0 | 0 |
| 7:00 AM | 97 | 0 | 0 | 0 | 1 | 29 | 51 | 15 | 1 | 0 | 0 | 0 | 0 | 0 |
| 8:00 AM | 327 | 0 | 0 | 1 | 15 | 144 | 149 | 17 | 1 | 0 | 0 | 0 | 0 | 0 |
| 9:00 AM | 265 | 0 | 0 | 2 | 13 | 113 | 120 | 16 | 1 | 0 | 0 | 0 | 0 | 0 |
| 10:00 AM | 73 | 0 | 1 | 1 | 1 | 21 | 32 | 16 | 1 | 0 | 0 | 0 | 0 | 0 |
| 11:00 AM | - | - | - | - | - | - | - | - | - | - | - | - | - | - |
| 12:00 PM | - | - | - | - | - | - | - | - | - | - | - | - | - | - |
| 1:00 PM | - | - | - | - | - | - | - | - | - | - | - | - | - | - |
| 2:00 PM | - | - | - | - | - | - | - | - | - | - | - | - | - | - |
| Total | 3060 | 3 | 5 | 15 | 135 | 1158 | 1417 | 300 | 26 | 1 | 0 | 0 | 0 | 0 |
| % | | 0.1 | 0.2 | 0.5 | 4.4 | 37.8 | 46.3 | 9.8 | 0.8 | 0.0 | 0.0 | 0.0 | 0.0 | 0.0 |

| Percentile Speeds | 10 % | 15 % | 50 % | 85 % | 90 % |
|---|---|---|---|---|---|
| (mph) | 31.2 | 32.1 | 35.7 | 39.3 | 40.1 |

| | | | |
|---|---|---|---|
| 10 mph Pace Speed | 30.3 - 40.3 | Average | 35.7 mph |
| Number in Pace | 2600 (85.0 %) | Minimum | 8.1 mph |
| | | Maximum | 51.7 mph |

| Speeds Exceeded | 45 mph | 55 mph | 65 mph |
|---|---|---|---|
| | 0.9 % | 0.0 % | 0.0 % |
| Count | 27 | 0 | 0 |

21st &:
jasper:
e.b.:

Site: 21st and jasper e.b.
Date: 12/9/2014
Tuesday

# 24 Hour Volume, per Channel

| Interval Begin | e.b. |
|---|---|
| 3:00 PM | 143 |
| 4:00 PM | 127 |
| 5:00 PM | 164 |
| 6:00 PM | 126 |
| 7:00 PM | 85 |
| 8:00 PM | 46 |
| 9:00 PM | 43 |
| 10:00 PM | 26 |
| 11:00 PM | 13 |
| 12/10/2014 | |
| 12:00 AM | 6 |
| 1:00 AM | 4 |
| 2:00 AM | 8 |
| 3:00 AM | 7 |
| 4:00 AM | 20 |
| 5:00 AM | 35 |
| 6:00 AM | 85 |
| 7:00 AM | 166 |
| 8:00 AM | 151 |
| 9:00 AM | 76 |
| 10:00 AM | 59 |
| 11:00 AM | 103 |
| 12:00 PM | 125 |
| 1:00 PM | 103 |
| 2:00 PM | 97 |
| Totals | 1818 |

## Peak Hours

| | |
|---|---|
| 12:00 AM - 12:00 PM | 7:30 AM |
| Volume | 217 |
| Factor | 0.72 |
| 12:00 PM - 12:00 AM | 5:05 PM |
| Volume | 165 |
| Factor | 0.65 |

21st &:
jasper:
e.b.:

Site: 21st and jasper e.b.
Date: 12/10/2014
Wednesday

# 24 Hour Volume, per Channel

| Interval Begin | e.b. |
|---|---|
| 3:00 PM | 175 |
| 4:00 PM | 130 |
| 5:00 PM | 159 |
| 6:00 PM | 126 |
| 7:00 PM | 85 |
| 8:00 PM | 81 |
| 9:00 PM | 34 |
| 10:00 PM | 28 |
| 11:00 PM | 9 |
| 12/11/2014 | |
| 12:00 AM | 8 |
| 1:00 AM | 6 |
| 2:00 AM | 3 |
| 3:00 AM | 8 |
| 4:00 AM | 20 |
| 5:00 AM | 38 |
| 6:00 AM | 84 |
| 7:00 AM | 167 |
| 8:00 AM | 160 |
| 9:00 AM | 12 |
| Totals | 1333 |

## Peak Hours

| | |
|---|---|
| 12:00 AM - 12:00 PM | 7:35 AM |
| Volume | 215 |
| Factor | 0.62 |
| 12:00 PM - 12:00 AM | 3:00 PM |
| Volume | 175 |
| Factor | 0.63 |

21st &: jasper w.b.:

Site: 21st and jasper w.b.
Date: 12/9/2014
Tuesday

## 24 Hour Volume, per Channel

| Interval Begin | w.b. |
|---|---|
| 4:00 PM | 211 |
| 5:00 PM | 174 |
| 6:00 PM | 194 |
| 7:00 PM | 148 |
| 8:00 PM | 98 |
| 9:00 PM | 105 |
| 10:00 PM | 65 |
| 11:00 PM | 39 |
| 12/10/2014 | |
| 12:00 AM | 19 |
| 1:00 AM | 8 |
| 2:00 AM | 6 |
| 3:00 AM | 3 |
| 4:00 AM | 1 |
| 5:00 AM | 2 |
| 6:00 AM | 21 |
| 7:00 AM | 36 |
| 8:00 AM | 146 |
| 9:00 AM | 141 |
| 10:00 AM | 61 |
| 11:00 AM | 60 |
| 12:00 PM | 92 |
| 1:00 PM | 113 |
| 2:00 PM | 109 |
| 3:00 PM | 96 |
| Totals | 1948 |

### Peak Hours

| | |
|---|---|
| 12:00 AM - 12:00 PM | 8:25 AM |
| Volume | 183 |
| Factor | 0.66 |
| 12:00 PM - 12:00 AM | 4:35 PM |
| Volume | 234 |
| Factor | 0.51 |

21st &: jasper w.b.:

Site: 21st and jasper w.b.
Date: 12/10/2014 Wednesday

# 24 Hour Volume, per Channel

| Interval Begin | w.b. |
|---|---|
| 4:00 PM | 223 |
| 5:00 PM | 168 |
| 6:00 PM | 184 |
| 7:00 PM | 155 |
| 8:00 PM | 99 |
| 9:00 PM | 108 |
| 10:00 PM | 86 |
| 11:00 PM | 36 |
| 12/11/2014 | |
| 12:00 AM | 25 |
| 1:00 AM | 7 |
| 2:00 AM | 10 |
| 3:00 AM | 5 |
| 4:00 AM | 4 |
| 5:00 AM | 6 |
| 6:00 AM | 18 |
| 7:00 AM | 29 |
| 8:00 AM | 123 |
| 9:00 AM | 141 |
| 10:00 AM | 4 |
| Totals | 1431 |

## Peak Hours

| | |
|---|---|
| 12:00 AM - 12:00 PM | 8:45 AM |
| Volume | 168 |
| Factor | 0.74 |
| 12:00 PM - 12:00 AM | 4:20 PM |
| Volume | 224 |
| Factor | 0.53 |

21st &:
jasper:
e.b.:

Site: 21st and jasper e.b.
Date: 12/9/2014
Tuesday

24 Hour Speed
Channel: e.b.

| mph | Total | 0 - < 15 | 15 - < 20 | 20 - < 25 | 25 - < 30 | 30 - < 35 | 35 - < 40 | 40 - < 45 | 45 - < 50 | 50 - < 55 | 55 - < 60 | 60 - < 65 | 65 - < 70 | 70 - < 200 |
|---|---|---|---|---|---|---|---|---|---|---|---|---|---|---|
| 3:00 PM | 143 | 0 | 0 | 1 | 24 | 67 | 44 | 7 | 0 | 0 | 0 | 0 | 0 | 0 |
| 4:00 PM | 127 | 0 | 0 | 1 | 23 | 64 | 35 | 4 | 0 | 0 | 0 | 0 | 0 | 0 |
| 5:00 PM | 164 | 0 | 0 | 3 | 39 | 97 | 24 | 1 | 0 | 0 | 0 | 0 | 0 | 0 |
| 6:00 PM | 126 | 0 | 1 | 3 | 23 | 73 | 26 | 0 | 0 | 0 | 0 | 0 | 0 | 0 |
| 7:00 PM | 85 | 0 | 0 | 3 | 22 | 42 | 17 | 1 | 0 | 0 | 0 | 0 | 0 | 0 |
| 8:00 PM | 46 | 0 | 0 | 1 | 13 | 23 | 8 | 1 | 0 | 0 | 0 | 0 | 0 | 0 |
| 9:00 PM | 43 | 0 | 0 | 3 | 10 | 22 | 5 | 2 | 0 | 1 | 0 | 0 | 0 | 0 |
| 10:00 PM | 26 | 0 | 0 | 2 | 7 | 12 | 4 | 1 | 0 | 0 | 0 | 0 | 0 | 0 |
| 11:00 PM | 13 | 0 | 0 | 0 | 3 | 7 | 2 | 0 | 0 | 1 | 0 | 0 | 0 | 0 |
| 12/10/2014 | | | | | | | | | | | | | | |
| 12:00 AM | 6 | 0 | 0 | 0 | 2 | 3 | 1 | 0 | 0 | 0 | 0 | 0 | 0 | 0 |
| 1:00 AM | 4 | 0 | 0 | 1 | 2 | 1 | 0 | 0 | 0 | 0 | 0 | 0 | 0 | 0 |
| 2:00 AM | 8 | 0 | 0 | 0 | 2 | 5 | 0 | 0 | 1 | 0 | 0 | 0 | 0 | 0 |
| 3:00 AM | 7 | 0 | 0 | 0 | 4 | 3 | 0 | 0 | 0 | 0 | 0 | 0 | 0 | 0 |
| 4:00 AM | 20 | 0 | 0 | 3 | 3 | 4 | 7 | 3 | 0 | 0 | 0 | 0 | 0 | 0 |
| 5:00 AM | 35 | 0 | 0 | 2 | 14 | 14 | 5 | 0 | 0 | 0 | 0 | 0 | 0 | 0 |
| 6:00 AM | 85 | 0 | 0 | 0 | 25 | 48 | 12 | 0 | 0 | 0 | 0 | 0 | 0 | 0 |
| 7:00 AM | 166 | 0 | 0 | 4 | 40 | 86 | 30 | 5 | 0 | 1 | 0 | 0 | 0 | 0 |
| 8:00 AM | 151 | 0 | 0 | 2 | 34 | 93 | 19 | 2 | 0 | 1 | 0 | 0 | 0 | 0 |
| 9:00 AM | 76 | 0 | 0 | 3 | 12 | 33 | 21 | 5 | 2 | 0 | 0 | 0 | 0 | 0 |
| 10:00 AM | 59 | 0 | 0 | 1 | 10 | 27 | 19 | 1 | 1 | 0 | 0 | 0 | 0 | 0 |
| 11:00 AM | 103 | 0 | 1 | 1 | 14 | 53 | 27 | 7 | 0 | 0 | 0 | 0 | 0 | 0 |
| 12:00 PM | 125 | 0 | 0 | 2 | 13 | 70 | 33 | 7 | 0 | 0 | 0 | 0 | 0 | 0 |
| 1:00 PM | 103 | 0 | 0 | 1 | 19 | 47 | 27 | 8 | 1 | 0 | 0 | 0 | 0 | 0 |
| 2:00 PM | 97 | 0 | 0 | 1 | 13 | 41 | 36 | 5 | 1 | 0 | 0 | 0 | 0 | 0 |
| Total | 1818 | 0 | 2 | 38 | 371 | 935 | 402 | 60 | 6 | 4 | 0 | 0 | 0 | 0 |
| % | | 0.0 | 0.1 | 2.1 | 20.4 | 51.4 | 22.1 | 3.3 | 0.3 | 0.2 | 0.0 | 0.0 | 0.0 | 0.0 |

| Percentile Speeds (mph) | 10 % | 15 % | 50 % | 85 % | 90 % |
|---|---|---|---|---|---|
| | 28.0 | 28.9 | 32.4 | 36.8 | 37.8 |

| | | | |
|---|---|---|---|
| 10 mph Pace Speed | 27.5 - 37.5 | Average | 32.7 mph |
| Number in Pace | 1472 (81.0 %) | Minimum | 19.2 mph |
| | | Maximum | 52.6 mph |

| Speeds Exceeded | 45 mph | 55 mph | 65 mph |
|---|---|---|---|
| | 0.6 % | 0.0 % | 0.0 % |
| Count | 10 | 0 | 0 |

21st &:
jasper:
e.b.:

Site: 21st and jasper e.b.
Date: 12/10/2014
Wednesday

24 Hour Speed
Channel: e.b.

| mph | Total | 0 - < 15 | 15 - < 20 | 20 - < 25 | 25 - < 30 | 30 - < 35 | 35 - < 40 | 40 - < 45 | 45 - < 50 | 50 - < 55 | 55 - < 60 | 60 - < 65 | 65 - < 70 | 70 - < 200 |
|---|---|---|---|---|---|---|---|---|---|---|---|---|---|---|
| 3:00 PM | 175 | 0 | 0 | 2 | 35 | 92 | 40 | 5 | 1 | 0 | 0 | 0 | 0 | 0 |
| 4:00 PM | 130 | 0 | 0 | 5 | 30 | 67 | 27 | 1 | 0 | 0 | 0 | 0 | 0 | 0 |
| 5:00 PM | 159 | 0 | 0 | 2 | 43 | 85 | 24 | 5 | 0 | 0 | 0 | 0 | 0 | 0 |
| 6:00 PM | 126 | 0 | 0 | 5 | 42 | 62 | 11 | 5 | 1 | 0 | 0 | 0 | 0 | 0 |
| 7:00 PM | 85 | 0 | 0 | 5 | 24 | 41 | 13 | 2 | 0 | 0 | 0 | 0 | 0 | 0 |
| 8:00 PM | 81 | 0 | 0 | 3 | 26 | 44 | 8 | 0 | 0 | 0 | 0 | 0 | 0 | 0 |
| 9:00 PM | 34 | 0 | 0 | 1 | 11 | 13 | 9 | 0 | 0 | 0 | 0 | 0 | 0 | 0 |
| 10:00 PM | 28 | 0 | 0 | 1 | 13 | 13 | 1 | 0 | 0 | 0 | 0 | 0 | 0 | 0 |
| 11:00 PM | 9 | 0 | 0 | 0 | 1 | 7 | 0 | 1 | 0 | 0 | 0 | 0 | 0 | 0 |
| 12/11/2014 | | | | | | | | | | | | | | |
| 12:00 AM | 8 | 0 | 0 | 0 | 4 | 1 | 2 | 0 | 1 | 0 | 0 | 0 | 0 | 0 |
| 1:00 AM | 6 | 0 | 0 | 1 | 4 | 1 | 0 | 0 | 0 | 0 | 0 | 0 | 0 | 0 |
| 2:00 AM | 3 | 0 | 0 | 0 | 1 | 1 | 1 | 0 | 0 | 0 | 0 | 0 | 0 | 0 |
| 3:00 AM | 8 | 0 | 0 | 0 | 3 | 2 | 3 | 0 | 0 | 0 | 0 | 0 | 0 | 0 |
| 4:00 AM | 20 | 0 | 0 | 1 | 4 | 11 | 3 | 1 | 0 | 0 | 0 | 0 | 0 | 0 |
| 5:00 AM | 38 | 0 | 0 | 4 | 7 | 15 | 12 | 0 | 0 | 0 | 0 | 0 | 0 | 0 |
| 6:00 AM | 84 | 0 | 0 | 5 | 23 | 37 | 16 | 3 | 0 | 0 | 0 | 0 | 0 | 0 |
| 7:00 AM | 167 | 0 | 0 | 4 | 32 | 97 | 30 | 4 | 0 | 0 | 0 | 0 | 0 | 0 |
| 8:00 AM | 160 | 0 | 0 | 3 | 39 | 90 | 23 | 4 | 1 | 0 | 0 | 0 | 0 | 0 |
| 9:00 AM | 12 | 0 | 0 | 0 | 3 | 4 | 4 | 1 | 0 | 0 | 0 | 0 | 0 | 0 |
| 10:00 AM | - | - | - | - | - | - | - | - | - | - | - | - | - | - |
| 11:00 AM | - | - | - | - | - | - | - | - | - | - | - | - | - | - |
| 12:00 PM | - | - | - | - | - | - | - | - | - | - | - | - | - | - |
| 1:00 PM | - | - | - | - | - | - | - | - | - | - | - | - | - | - |
| 2:00 PM | - | - | - | - | - | - | - | - | - | - | - | - | - | - |
| Total | 1333 | 0 | 0 | 42 | 345 | 683 | 227 | 32 | 4 | 0 | 0 | 0 | 0 | 0 |
| % | | 0.0 | 0.0 | 3.2 | 25.9 | 51.2 | 17.0 | 2.4 | 0.3 | 0.0 | 0.0 | 0.0 | 0.0 | 0.0 |

| Percentile Speeds (mph) | 10 % | 15 % | 50 % | 85 % | 90 % |
|---|---|---|---|---|---|
| | 27.5 | 28.4 | 31.9 | 35.8 | 36.8 |

| | | | |
|---|---|---|---|
| 10 mph Pace Speed | 27.0 - 37.0 | Average | 32.0 mph |
| Number in Pace | 1108 (83.1 %) | Minimum | 20.2 mph |
| | | Maximum | 49.5 mph |

| Speeds Exceeded | 45 mph | 55 mph | 65 mph |
|---|---|---|---|
| | 0.3 % | 0.0 % | 0.0 % |
| Count | 4 | 0 | 0 |

21st &: jasper w.b.:

Site: 21st and jasper w.b.
Date: 12/9/2014
Tuesday

24 Hour Speed
Channel: w.b.

| mph | Total | 0 - < 15 | 15 - < 20 | 20 - < 25 | 25 - < 30 | 30 - < 35 | 35 - < 40 | 40 - < 45 | 45 - < 50 | 50 - < 55 | 55 - < 60 | 60 - < 65 | 65 - < 70 | 70 - < 200 |
|---|---|---|---|---|---|---|---|---|---|---|---|---|---|---|
| 4:00 PM | 211 | 0 | 0 | 2 | 17 | 113 | 58 | 13 | 8 | 0 | 0 | 0 | 0 | 0 |
| 5:00 PM | 174 | 0 | 0 | 1 | 34 | 78 | 52 | 9 | 0 | 0 | 0 | 0 | 0 | 0 |
| 6:00 PM | 194 | 0 | 0 | 1 | 37 | 112 | 40 | 4 | 0 | 0 | 0 | 0 | 0 | 0 |
| 7:00 PM | 148 | 0 | 0 | 0 | 31 | 79 | 33 | 4 | 1 | 0 | 0 | 0 | 0 | 0 |
| 8:00 PM | 98 | 0 | 0 | 0 | 16 | 56 | 21 | 5 | 0 | 0 | 0 | 0 | 0 | 0 |
| 9:00 PM | 105 | 0 | 0 | 0 | 29 | 48 | 19 | 7 | 2 | 0 | 0 | 0 | 0 | 0 |
| 10:00 PM | 65 | 0 | 0 | 0 | 15 | 38 | 11 | 1 | 0 | 0 | 0 | 0 | 0 | 0 |
| 11:00 PM | 39 | 0 | 0 | 0 | 5 | 25 | 9 | 0 | 0 | 0 | 0 | 0 | 0 | 0 |
| 12/10/2014 | | | | | | | | | | | | | | |
| 12:00 AM | 19 | 0 | 0 | 0 | 6 | 7 | 4 | 2 | 0 | 0 | 0 | 0 | 0 | 0 |
| 1:00 AM | 8 | 0 | 0 | 0 | 2 | 2 | 4 | 0 | 0 | 0 | 0 | 0 | 0 | 0 |
| 2:00 AM | 6 | 0 | 0 | 0 | 0 | 5 | 0 | 1 | 0 | 0 | 0 | 0 | 0 | 0 |
| 3:00 AM | 3 | 0 | 0 | 0 | 0 | 1 | 2 | 0 | 0 | 0 | 0 | 0 | 0 | 0 |
| 4:00 AM | 1 | 0 | 0 | 0 | 0 | 0 | 1 | 0 | 0 | 0 | 0 | 0 | 0 | 0 |
| 5:00 AM | 2 | 0 | 0 | 0 | 1 | 1 | 0 | 0 | 0 | 0 | 0 | 0 | 0 | 0 |
| 6:00 AM | 21 | 0 | 0 | 0 | 7 | 6 | 7 | 1 | 0 | 0 | 0 | 0 | 0 | 0 |
| 7:00 AM | 36 | 0 | 0 | 2 | 10 | 16 | 5 | 2 | 0 | 1 | 0 | 0 | 0 | 0 |
| 8:00 AM | 146 | 0 | 0 | 3 | 20 | 78 | 33 | 11 | 1 | 0 | 0 | 0 | 0 | 0 |
| 9:00 AM | 141 | 0 | 0 | 1 | 24 | 68 | 38 | 9 | 1 | 0 | 0 | 0 | 0 | 0 |
| 10:00 AM | 61 | 1 | 0 | 2 | 4 | 27 | 18 | 8 | 1 | 0 | 0 | 0 | 0 | 0 |
| 11:00 AM | 60 | 0 | 0 | 0 | 13 | 19 | 20 | 6 | 2 | 0 | 0 | 0 | 0 | 0 |
| 12:00 PM | 92 | 0 | 0 | 2 | 7 | 40 | 31 | 11 | 0 | 1 | 0 | 0 | 0 | 0 |
| 1:00 PM | 113 | 0 | 0 | 1 | 8 | 49 | 43 | 12 | 0 | 0 | 0 | 0 | 0 | 0 |
| 2:00 PM | 109 | 0 | 0 | 2 | 6 | 44 | 35 | 18 | 4 | 0 | 0 | 0 | 0 | 0 |
| 3:00 PM | 96 | 0 | 0 | 0 | 14 | 31 | 35 | 11 | 5 | 0 | 0 | 0 | 0 | 0 |
| Total | 1948 | 1 | 0 | 17 | 306 | 943 | 519 | 135 | 25 | 2 | 0 | 0 | 0 | 0 |
| % | | 0.1 | 0.0 | 0.9 | 15.7 | 48.4 | 26.6 | 6.9 | 1.3 | 0.1 | 0.0 | 0.0 | 0.0 | 0.0 |

| Percentile Speeds | 10 % | 15 % | 50 % | 85 % | 90 % |
|---|---|---|---|---|---|
| (mph) | 29.1 | 29.7 | 33.5 | 38.2 | 39.4 |

| | | | |
|---|---|---|---|
| 10 mph Pace Speed | 28.5 - 38.5 | Average | 33.9 mph |
| Number in Pace | 1563 (80.2 %) | Minimum | 13.5 mph |
| | | Maximum | 52.6 mph |

| Speeds Exceeded | 45 mph | 55 mph | 65 mph |
|---|---|---|---|
| | 1.4 % | 0.0 % | 0.0 % |
| Count | 27 | 0 | 0 |

21st &: jasper w.b.:

Site: 21st and jasper w.b.
Date: 12/10/2014
Wednesday

24 Hour Speed
Channel: w.b.

| mph | Total | 0 - < 15 | 15 - < 20 | 20 - < 25 | 25 - < 30 | 30 - < 35 | 35 - < 40 | 40 - < 45 | 45 - < 50 | 50 - < 55 | 55 - < 60 | 60 - < 65 | 65 - < 70 | 70 - < 200 |
|---|---|---|---|---|---|---|---|---|---|---|---|---|---|---|
| 4:00 PM | 223 | 0 | 0 | 2 | 27 | 85 | 81 | 24 | 4 | 0 | 0 | 0 | 0 | 0 |
| 5:00 PM | 168 | 0 | 0 | 1 | 18 | 87 | 44 | 15 | 3 | 0 | 0 | 0 | 0 | 0 |
| 6:00 PM | 184 | 0 | 0 | 1 | 17 | 117 | 47 | 2 | 0 | 0 | 0 | 0 | 0 | 0 |
| 7:00 PM | 155 | 0 | 0 | 1 | 29 | 91 | 24 | 9 | 1 | 0 | 0 | 0 | 0 | 0 |
| 8:00 PM | 99 | 0 | 0 | 1 | 14 | 49 | 31 | 4 | 0 | 0 | 0 | 0 | 0 | 0 |
| 9:00 PM | 108 | 0 | 0 | 2 | 22 | 65 | 16 | 3 | 0 | 0 | 0 | 0 | 0 | 0 |
| 10:00 PM | 86 | 0 | 0 | 0 | 16 | 40 | 23 | 6 | 1 | 0 | 0 | 0 | 0 | 0 |
| 11:00 PM | 36 | 0 | 0 | 0 | 7 | 22 | 6 | 0 | 1 | 0 | 0 | 0 | 0 | 0 |
| 12/11/2014 | | | | | | | | | | | | | | |
| 12:00 AM | 25 | 0 | 0 | 0 | 1 | 13 | 6 | 4 | 1 | 0 | 0 | 0 | 0 | 0 |
| 1:00 AM | 7 | 0 | 0 | 0 | 0 | 3 | 3 | 1 | 0 | 0 | 0 | 0 | 0 | 0 |
| 2:00 AM | 10 | 0 | 0 | 0 | 3 | 2 | 3 | 0 | 1 | 1 | 0 | 0 | 0 | 0 |
| 3:00 AM | 5 | 0 | 0 | 0 | 1 | 4 | 0 | 0 | 0 | 0 | 0 | 0 | 0 | 0 |
| 4:00 AM | 4 | 0 | 0 | 0 | 1 | 1 | 1 | 1 | 0 | 0 | 0 | 0 | 0 | 0 |
| 5:00 AM | 6 | 0 | 0 | 0 | 0 | 5 | 1 | 0 | 0 | 0 | 0 | 0 | 0 | 0 |
| 6:00 AM | 18 | 0 | 0 | 2 | 6 | 6 | 4 | 0 | 0 | 0 | 0 | 0 | 0 | 0 |
| 7:00 AM | 29 | 0 | 0 | 1 | 10 | 15 | 2 | 1 | 0 | 0 | 0 | 0 | 0 | 0 |
| 8:00 AM | 123 | 0 | 0 | 2 | 19 | 58 | 38 | 6 | 0 | 0 | 0 | 0 | 0 | 0 |
| 9:00 AM | 141 | 0 | 0 | 1 | 16 | 57 | 57 | 10 | 0 | 0 | 0 | 0 | 0 | 0 |
| 10:00 AM | 4 | 1 | 0 | 0 | 1 | 0 | 2 | 0 | 0 | 0 | 0 | 0 | 0 | 0 |
| 11:00 AM | - | - | - | - | - | - | - | - | - | - | - | - | - | - |
| 12:00 PM | - | - | - | - | - | - | - | - | - | - | - | - | - | - |
| 1:00 PM | - | - | - | - | - | - | - | - | - | - | - | - | - | - |
| 2:00 PM | - | - | - | - | - | - | - | - | - | - | - | - | - | - |
| 3:00 PM | - | - | - | - | - | - | - | - | - | - | - | - | - | - |
| Total | 1431 | 1 | 0 | 14 | 208 | 720 | 389 | 86 | 12 | 1 | 0 | 0 | 0 | 0 |
| % | | 0.1 | 0.0 | 1.0 | 14.5 | 50.3 | 27.2 | 6.0 | 0.8 | 0.1 | 0.0 | 0.0 | 0.0 | 0.0 |

| Percentile Speeds (mph) | 10 % | 15 % | 50 % | 85 % | 90 % |
|---|---|---|---|---|---|
| | 28.9 | 29.9 | 33.5 | 38.0 | 39.0 |

| | | | |
|---|---|---|---|
| 10 mph Pace Speed | 28.5 - 38.5 | Average | 33.8 mph |
| Number in Pace | 1151 (80.4 %) | Minimum | 11.7 mph |
| | | Maximum | 50.9 mph |

| Speeds Exceeded | 45 mph | 55 mph | 65 mph |
|---|---|---|---|
| | 0.9 % | 0.0 % | 0.0 % |
| Count | 13 | 0 | 0 |

Missouri &:
Pinion:
N.B.:

Site: Missouri and Pinion N.B.
Date: 12/9/2014
Tuesday

# 24 Hour Volume, per Channel

| Interval Begin | NB |
|---|---|
| 3:00 PM | 63 |
| 4:00 PM | 70 |
| 5:00 PM | 45 |
| 6:00 PM | 44 |
| 7:00 PM | 36 |
| 8:00 PM | 19 |
| 9:00 PM | 11 |
| 10:00 PM | 15 |
| 11:00 PM | 6 |
| 12/10/2014 | |
| 12:00 AM | 10 |
| 1:00 AM | 4 |
| 2:00 AM | 1 |
| 3:00 AM | 1 |
| 4:00 AM | 2 |
| 5:00 AM | 7 |
| 6:00 AM | 20 |
| 7:00 AM | 43 |
| 8:00 AM | 70 |
| 9:00 AM | 41 |
| 10:00 AM | 28 |
| 11:00 AM | 24 |
| 12:00 PM | 48 |
| 1:00 PM | 56 |
| 2:00 PM | 41 |
| Totals | 705 |

## Peak Hours

| | |
|---|---|
| 12:00 AM - 12:00 PM | 8:10 AM |
| Volume | 75 |
| Factor | 0.63 |
| 12:00 PM - 12:00 AM | 3:25 PM |
| Volume | 89 |
| Factor | 0.57 |

Missouri &:
Pinion:
N.B.:

Site: Missouri and Pinion N.B.
Date: 12/10/2014
Wednesday

# 24 Hour Volume, per Channel

| Interval Begin | NB |
|---|---|
| 3:00 PM | 65 |
| 4:00 PM | 76 |
| 5:00 PM | 59 |
| 6:00 PM | 43 |
| 7:00 PM | 25 |
| 8:00 PM | 28 |
| 9:00 PM | 15 |
| 10:00 PM | 10 |
| 11:00 PM | 8 |
| 12/11/2014 | |
| 12:00 AM | 5 |
| 1:00 AM | 3 |
| 2:00 AM | 2 |
| 3:00 AM | 5 |
| 4:00 AM | 2 |
| 5:00 AM | 5 |
| 6:00 AM | 16 |
| 7:00 AM | 39 |
| 8:00 AM | 92 |
| 9:00 AM | 26 |
| Totals | 524 |

## Peak Hours

| | |
|---|---|
| 12:00 AM - 12:00 PM | 8:00 AM |
| Volume | 92 |
| Factor | 0.77 |
| 12:00 PM - 12:00 AM | 3:20 PM |
| Volume | 95 |
| Factor | 0.44 |

Missouri &:
Pinion:
N.B.:

Site: Missouri and Pinion N.B.
Date: 12/9/2014
Tuesday

24 Hour Speed
Channel: NB

| mph | Total | 0 - < 15 | 15 - < 20 | 20 - < 25 | 25 - < 30 | 30 - < 35 | 35 - < 40 | 40 - < 45 | 45 - < 50 | 50 - < 55 | 55 - < 60 | 60 - < 65 | 65 - < 70 | 70 - < 200 |
|---|---|---|---|---|---|---|---|---|---|---|---|---|---|---|
| 3:00 PM | 63 | 0 | 2 | 10 | 11 | 17 | 10 | 5 | 3 | 4 | 0 | 1 | 0 | 0 |
| 4:00 PM | 70 | 1 | 0 | 8 | 13 | 33 | 13 | 2 | 0 | 0 | 0 | 0 | 0 | 0 |
| 5:00 PM | 45 | 0 | 1 | 6 | 8 | 24 | 6 | 0 | 0 | 0 | 0 | 0 | 0 | 0 |
| 6:00 PM | 44 | 0 | 0 | 3 | 9 | 22 | 10 | 0 | 0 | 0 | 0 | 0 | 0 | 0 |
| 7:00 PM | 36 | 0 | 0 | 3 | 11 | 17 | 5 | 0 | 0 | 0 | 0 | 0 | 0 | 0 |
| 8:00 PM | 19 | 0 | 0 | 2 | 5 | 7 | 4 | 1 | 0 | 0 | 0 | 0 | 0 | 0 |
| 9:00 PM | 11 | 0 | 0 | 1 | 4 | 5 | 1 | 0 | 0 | 0 | 0 | 0 | 0 | 0 |
| 10:00 PM | 15 | 0 | 0 | 1 | 3 | 9 | 2 | 0 | 0 | 0 | 0 | 0 | 0 | 0 |
| 11:00 PM | 6 | 0 | 1 | 0 | 3 | 2 | 0 | 0 | 0 | 0 | 0 | 0 | 0 | 0 |
| 12/10/2014 | | | | | | | | | | | | | | |
| 12:00 AM | 10 | 0 | 0 | 2 | 2 | 5 | 1 | 0 | 0 | 0 | 0 | 0 | 0 | 0 |
| 1:00 AM | 4 | 0 | 0 | 0 | 2 | 2 | 0 | 0 | 0 | 0 | 0 | 0 | 0 | 0 |
| 2:00 AM | 1 | 0 | 0 | 0 | 0 | 1 | 0 | 0 | 0 | 0 | 0 | 0 | 0 | 0 |
| 3:00 AM | 1 | 0 | 0 | 0 | 0 | 0 | 1 | 0 | 0 | 0 | 0 | 0 | 0 | 0 |
| 4:00 AM | 2 | 0 | 0 | 0 | 0 | 1 | 0 | 0 | 1 | 0 | 0 | 0 | 0 | 0 |
| 5:00 AM | 7 | 0 | 0 | 1 | 2 | 3 | 1 | 0 | 0 | 0 | 0 | 0 | 0 | 0 |
| 6:00 AM | 20 | 0 | 1 | 3 | 6 | 8 | 2 | 0 | 0 | 0 | 0 | 0 | 0 | 0 |
| 7:00 AM | 43 | 0 | 1 | 5 | 13 | 17 | 4 | 3 | 0 | 0 | 0 | 0 | 0 | 0 |
| 8:00 AM | 70 | 0 | 0 | 7 | 22 | 30 | 11 | 0 | 0 | 0 | 0 | 0 | 0 | 0 |
| 9:00 AM | 41 | 0 | 0 | 5 | 6 | 21 | 5 | 1 | 2 | 1 | 0 | 0 | 0 | 0 |
| 10:00 AM | 28 | 0 | 0 | 2 | 6 | 11 | 8 | 1 | 0 | 0 | 0 | 0 | 0 | 0 |
| 11:00 AM | 24 | 0 | 2 | 3 | 3 | 9 | 3 | 2 | 2 | 0 | 0 | 0 | 0 | 0 |
| 12:00 PM | 48 | 1 | 3 | 14 | 9 | 9 | 2 | 5 | 3 | 2 | 0 | 0 | 0 | 0 |
| 1:00 PM | 56 | 0 | 3 | 12 | 11 | 14 | 9 | 2 | 4 | 1 | 0 | 0 | 0 | 0 |
| 2:00 PM | 41 | 0 | 3 | 6 | 9 | 7 | 7 | 3 | 2 | 2 | 2 | 0 | 0 | 0 |
| Total | 705 | 2 | 17 | 94 | 158 | 274 | 105 | 25 | 17 | 10 | 2 | 1 | 0 | 0 |
| % | | 0.3 | 2.4 | 13.3 | 22.4 | 38.9 | 14.9 | 3.5 | 2.4 | 1.4 | 0.3 | 0.1 | 0.0 | 0.0 |

| Percentile Speeds (mph) | 10 % | 15 % | 50 % | 85 % | 90 % |
|---|---|---|---|---|---|
| | 22.6 | 24.6 | 31.4 | 36.6 | 38.3 |

| | | | |
|---|---|---|---|
| 10 mph Pace Speed | 26.4 - 36.4 | Average | 31.4 mph |
| Number in Pace | 450 (63.8 %) | Minimum | 14.0 mph |
| | | Maximum | 60.1 mph |

| Speeds Exceeded | 45 mph | 55 mph | 65 mph |
|---|---|---|---|
| | 4.3 % | 0.4 % | 0.0 % |
| Count | 30 | 3 | 0 |

Missouri &:
Pinion:
N.B.:

Site: Missouri and Pinion N.B.
Date: 12/10/2014
Wednesday

24 Hour Speed
Channel: NB

| mph | Total | 0 - < 15 | 15 - < 20 | 20 - < 25 | 25 - < 30 | 30 - < 35 | 35 - < 40 | 40 - < 45 | 45 - < 50 | 50 - < 55 | 55 - < 60 | 60 - < 65 | 65 - < 70 | 70 - < 200 |
|---|---|---|---|---|---|---|---|---|---|---|---|---|---|---|
| 3:00 PM | 65 | 0 | 3 | 11 | 9 | 14 | 18 | 5 | 2 | 2 | 1 | 0 | 0 | 0 |
| 4:00 PM | 76 | 1 | 0 | 16 | 18 | 26 | 6 | 1 | 6 | 1 | 1 | 0 | 0 | 0 |
| 5:00 PM | 59 | 0 | 2 | 8 | 26 | 21 | 2 | 0 | 0 | 0 | 0 | 0 | 0 | 0 |
| 6:00 PM | 43 | 0 | 1 | 5 | 11 | 18 | 8 | 0 | 0 | 0 | 0 | 0 | 0 | 0 |
| 7:00 PM | 25 | 0 | 0 | 3 | 10 | 12 | 0 | 0 | 0 | 0 | 0 | 0 | 0 | 0 |
| 8:00 PM | 28 | 0 | 0 | 2 | 11 | 12 | 3 | 0 | 0 | 0 | 0 | 0 | 0 | 0 |
| 9:00 PM | 15 | 0 | 0 | 0 | 12 | 3 | 0 | 0 | 0 | 0 | 0 | 0 | 0 | 0 |
| 10:00 PM | 10 | 0 | 0 | 1 | 3 | 2 | 3 | 1 | 0 | 0 | 0 | 0 | 0 | 0 |
| 11:00 PM | 8 | 0 | 0 | 1 | 2 | 5 | 0 | 0 | 0 | 0 | 0 | 0 | 0 | 0 |
| 12/11/2014 | | | | | | | | | | | | | | |
| 12:00 AM | 5 | 0 | 0 | 0 | 4 | 1 | 0 | 0 | 0 | 0 | 0 | 0 | 0 | 0 |
| 1:00 AM | 3 | 0 | 0 | 1 | 1 | 1 | 0 | 0 | 0 | 0 | 0 | 0 | 0 | 0 |
| 2:00 AM | 2 | 0 | 0 | 0 | 0 | 2 | 0 | 0 | 0 | 0 | 0 | 0 | 0 | 0 |
| 3:00 AM | 5 | 0 | 0 | 0 | 3 | 1 | 1 | 0 | 0 | 0 | 0 | 0 | 0 | 0 |
| 4:00 AM | 2 | 0 | 0 | 0 | 1 | 1 | 0 | 0 | 0 | 0 | 0 | 0 | 0 | 0 |
| 5:00 AM | 5 | 0 | 0 | 1 | 1 | 3 | 0 | 0 | 0 | 0 | 0 | 0 | 0 | 0 |
| 6:00 AM | 16 | 0 | 0 | 0 | 6 | 8 | 2 | 0 | 0 | 0 | 0 | 0 | 0 | 0 |
| 7:00 AM | 39 | 0 | 0 | 3 | 7 | 19 | 8 | 1 | 1 | 0 | 0 | 0 | 0 | 0 |
| 8:00 AM | 92 | 0 | 0 | 9 | 22 | 36 | 24 | 1 | 0 | 0 | 0 | 0 | 0 | 0 |
| 9:00 AM | 26 | 1 | 0 | 2 | 6 | 15 | 1 | 1 | 0 | 0 | 0 | 0 | 0 | 0 |
| 10:00 AM | - | - | - | - | - | - | - | - | - | - | - | - | - | - |
| 11:00 AM | - | - | - | - | - | - | - | - | - | - | - | - | - | - |
| 12:00 PM | - | - | - | - | - | - | - | - | - | - | - | - | - | - |
| 1:00 PM | - | - | - | - | - | - | - | - | - | - | - | - | - | - |
| 2:00 PM | - | - | - | - | - | - | - | - | - | - | - | - | - | - |
| Total | 524 | 2 | 6 | 63 | 153 | 200 | 76 | 10 | 9 | 3 | 2 | 0 | 0 | 0 |
| % | | 0.4 | 1.1 | 12.0 | 29.2 | 38.2 | 14.5 | 1.9 | 1.7 | 0.6 | 0.4 | 0.0 | 0.0 | 0.0 |

| Percentile Speeds | 10 % | 15 % | 50 % | 85 % | 90 % |
|---|---|---|---|---|---|
| (mph) | 23.4 | 25.2 | 30.7 | 36.1 | 37.7 |

| | | | |
|---|---|---|---|
| 10 mph Pace Speed | 25.0 - 35.0 | Average | 30.9 mph |
| Number in Pace | 353 (67.4 %) | Minimum | 12.1 mph |
| | | Maximum | 57.1 mph |

| Speeds Exceeded | 45 mph | 55 mph | 65 mph |
|---|---|---|---|
| | 2.7 % | 0.4 % | 0.0 % |
| Count | 14 | 2 | 0 |

Missouri:
and Pinion:
S. B.:

Site: Missouri and Pinion
Date: 12/9/2014
Tuesday

# 24 Hour Volume, per Channel

| Interval Begin | S.B. |
|---|---|
| 4:00 PM | 58 |
| 5:00 PM | 67 |
| 6:00 PM | 90 |
| 7:00 PM | 68 |
| 8:00 PM | 47 |
| 9:00 PM | 42 |
| 10:00 PM | 26 |
| 11:00 PM | 25 |
| 12/10/2014 | |
| 12:00 AM | 7 |
| 1:00 AM | 5 |
| 2:00 AM | 1 |
| 3:00 AM | 3 |
| 4:00 AM | 2 |
| 5:00 AM | 2 |
| 6:00 AM | 6 |
| 7:00 AM | 12 |
| 8:00 AM | 21 |
| 9:00 AM | 51 |
| 10:00 AM | 29 |
| 11:00 AM | 24 |
| 12:00 PM | 34 |
| 1:00 PM | 61 |
| 2:00 PM | 40 |
| 3:00 PM | 40 |
| Totals | 761 |

## Peak Hours

| | |
|---|---|
| 12:00 AM - 12:00 PM | 8:45 AM |
| Volume | 54 |
| Factor | 0.64 |
| 12:00 PM - 12:00 AM | 6:05 PM |
| Volume | 92 |
| Factor | 0.77 |

Missouri:
and Pinion:
S. B.:

Site: Missouri and Pinion
Date: 12/10/2014
Wednesday

# 24 Hour Volume, per Channel

| Interval Begin | S.B. |
|---|---|
| 4:00 PM | 66 |
| 5:00 PM | 76 |
| 6:00 PM | 82 |
| 7:00 PM | 56 |
| 8:00 PM | 41 |
| 9:00 PM | 44 |
| 10:00 PM | 34 |
| 11:00 PM | 18 |
| 12/11/2014 | |
| 12:00 AM | 10 |
| 1:00 AM | 4 |
| 2:00 AM | 2 |
| 3:00 AM | 1 |
| 4:00 AM | 3 |
| 5:00 AM | 5 |
| 6:00 AM | 5 |
| 7:00 AM | 13 |
| 8:00 AM | 21 |
| 9:00 AM | 46 |
| 10:00 AM | 13 |
| Totals | 540 |

## Peak Hours

| | |
|---|---|
| 12:00 AM - 12:00 PM | 8:55 AM |
| Volume | 50 |
| Factor | 0.52 |
| 12:00 PM - 12:00 AM | 4:40 PM |
| Volume | 94 |
| Factor | 0.49 |

Missouri:
and Pinion:
S. B.:

Site: Missouri and Pinion
Date: 12/9/2014
Tuesday

24 Hour Speed
Channel: S.B.

| mph | Total | 0 - < 15 | 15 - < 20 | 20 - < 25 | 25 - < 30 | 30 - < 35 | 35 - < 40 | 40 - < 45 | 45 - < 50 | 50 - < 55 | 55 - < 60 | 60 - < 65 | 65 - < 70 | 70 - < 200 |
|---|---|---|---|---|---|---|---|---|---|---|---|---|---|---|
| 4:00 PM | 58 | 0 | 0 | 5 | 9 | 26 | 16 | 1 | 1 | 0 | 0 | 0 | 0 | 0 |
| 5:00 PM | 67 | 0 | 1 | 2 | 7 | 46 | 8 | 2 | 1 | 0 | 0 | 0 | 0 | 0 |
| 6:00 PM | 90 | 0 | 0 | 5 | 21 | 50 | 14 | 0 | 0 | 0 | 0 | 0 | 0 | 0 |
| 7:00 PM | 68 | 0 | 0 | 4 | 15 | 42 | 7 | 0 | 0 | 0 | 0 | 0 | 0 | 0 |
| 8:00 PM | 47 | 0 | 0 | 1 | 13 | 31 | 2 | 0 | 0 | 0 | 0 | 0 | 0 | 0 |
| 9:00 PM | 42 | 0 | 0 | 2 | 13 | 24 | 3 | 0 | 0 | 0 | 0 | 0 | 0 | 0 |
| 10:00 PM | 26 | 0 | 0 | 1 | 11 | 10 | 4 | 0 | 0 | 0 | 0 | 0 | 0 | 0 |
| 11:00 PM | 25 | 0 | 0 | 4 | 11 | 9 | 1 | 0 | 0 | 0 | 0 | 0 | 0 | 0 |
| 12/10/2014 | | | | | | | | | | | | | | |
| 12:00 AM | 7 | 0 | 0 | 0 | 3 | 4 | 0 | 0 | 0 | 0 | 0 | 0 | 0 | 0 |
| 1:00 AM | 5 | 0 | 0 | 1 | 1 | 3 | 0 | 0 | 0 | 0 | 0 | 0 | 0 | 0 |
| 2:00 AM | 1 | 0 | 0 | 0 | 1 | 0 | 0 | 0 | 0 | 0 | 0 | 0 | 0 | 0 |
| 3:00 AM | 3 | 0 | 0 | 1 | 0 | 1 | 1 | 0 | 0 | 0 | 0 | 0 | 0 | 0 |
| 4:00 AM | 2 | 0 | 0 | 1 | 1 | 0 | 0 | 0 | 0 | 0 | 0 | 0 | 0 | 0 |
| 5:00 AM | 2 | 0 | 0 | 0 | 1 | 0 | 0 | 1 | 0 | 0 | 0 | 0 | 0 | 0 |
| 6:00 AM | 6 | 0 | 0 | 1 | 1 | 4 | 0 | 0 | 0 | 0 | 0 | 0 | 0 | 0 |
| 7:00 AM | 12 | 0 | 0 | 3 | 1 | 4 | 4 | 0 | 0 | 0 | 0 | 0 | 0 | 0 |
| 8:00 AM | 21 | 0 | 1 | 2 | 8 | 7 | 3 | 0 | 0 | 0 | 0 | 0 | 0 | 0 |
| 9:00 AM | 51 | 0 | 0 | 4 | 28 | 17 | 2 | 0 | 0 | 0 | 0 | 0 | 0 | 0 |
| 10:00 AM | 29 | 1 | 0 | 2 | 6 | 14 | 5 | 0 | 1 | 0 | 0 | 0 | 0 | 0 |
| 11:00 AM | 24 | 0 | 0 | 1 | 5 | 13 | 5 | 0 | 0 | 0 | 0 | 0 | 0 | 0 |
| 12:00 PM | 34 | 0 | 1 | 3 | 7 | 16 | 7 | 0 | 0 | 0 | 0 | 0 | 0 | 0 |
| 1:00 PM | 61 | 0 | 0 | 8 | 11 | 27 | 12 | 2 | 1 | 0 | 0 | 0 | 0 | 0 |
| 2:00 PM | 40 | 0 | 0 | 1 | 12 | 17 | 8 | 1 | 0 | 0 | 0 | 0 | 1 | 0 |
| 3:00 PM | 40 | 0 | 0 | 2 | 9 | 22 | 7 | 0 | 0 | 0 | 0 | 0 | 0 | 0 |
| Total | 761 | 1 | 3 | 54 | 195 | 387 | 109 | 7 | 4 | 0 | 0 | 0 | 1 | 0 |
| % | | 0.1 | 0.4 | 7.1 | 25.6 | 50.9 | 14.3 | 0.9 | 0.5 | 0.0 | 0.0 | 0.0 | 0.1 | 0.0 |

| Percentile Speeds (mph) | 10 % | 15 % | 50 % | 85 % | 90 % |
|---|---|---|---|---|---|
| | 25.6 | 26.8 | 31.6 | 35.1 | 36.2 |

| | | | |
|---|---|---|---|
| 10 mph Pace Speed | 25.9 - 35.9 | Average | 31.3 mph |
| Number in Pace | 597 (78.4 %) | Minimum | 9.3 mph |
| | | Maximum | 67.0 mph |

| Speeds Exceeded | 45 mph | 55 mph | 65 mph |
|---|---|---|---|
| | 0.7 % | 0.1 % | 0.1 % |
| Count | 5 | 1 | 1 |

Missouri:
and Pinion:
S. B.:

Site: Missouri and Pinion
Date: 12/10/2014
Wednesday

24 Hour Speed
Channel: S.B.

| mph | Total | 0 - < 15 | 15 - < 20 | 20 - < 25 | 25 - < 30 | 30 - < 35 | 35 - < 40 | 40 - < 45 | 45 - < 50 | 50 - < 55 | 55 - < 60 | 60 - < 65 | 65 - < 70 | 70 - < 200 |
|---|---|---|---|---|---|---|---|---|---|---|---|---|---|---|
| 4:00 PM | 66 | 0 | 0 | 1 | 13 | 43 | 7 | 1 | 1 | 0 | 0 | 0 | 0 | 0 |
| 5:00 PM | 76 | 0 | 0 | 4 | 32 | 39 | 1 | 0 | 0 | 0 | 0 | 0 | 0 | 0 |
| 6:00 PM | 82 | 0 | 0 | 6 | 38 | 37 | 1 | 0 | 0 | 0 | 0 | 0 | 0 | 0 |
| 7:00 PM | 56 | 0 | 0 | 2 | 22 | 26 | 6 | 0 | 0 | 0 | 0 | 0 | 0 | 0 |
| 8:00 PM | 41 | 0 | 0 | 2 | 8 | 24 | 6 | 1 | 0 | 0 | 0 | 0 | 0 | 0 |
| 9:00 PM | 44 | 0 | 0 | 4 | 11 | 22 | 7 | 0 | 0 | 0 | 0 | 0 | 0 | 0 |
| 10:00 PM | 34 | 0 | 0 | 2 | 10 | 21 | 1 | 0 | 0 | 0 | 0 | 0 | 0 | 0 |
| 11:00 PM | 18 | 0 | 0 | 1 | 9 | 7 | 1 | 0 | 0 | 0 | 0 | 0 | 0 | 0 |
| 12/11/2014 | | | | | | | | | | | | | | |
| 12:00 AM | 10 | 0 | 0 | 0 | 7 | 2 | 1 | 0 | 0 | 0 | 0 | 0 | 0 | 0 |
| 1:00 AM | 4 | 0 | 0 | 0 | 3 | 1 | 0 | 0 | 0 | 0 | 0 | 0 | 0 | 0 |
| 2:00 AM | 2 | 0 | 0 | 0 | 1 | 1 | 0 | 0 | 0 | 0 | 0 | 0 | 0 | 0 |
| 3:00 AM | 1 | 0 | 0 | 0 | 1 | 0 | 0 | 0 | 0 | 0 | 0 | 0 | 0 | 0 |
| 4:00 AM | 3 | 0 | 0 | 2 | 1 | 0 | 0 | 0 | 0 | 0 | 0 | 0 | 0 | 0 |
| 5:00 AM | 5 | 0 | 0 | 0 | 2 | 2 | 0 | 0 | 1 | 0 | 0 | 0 | 0 | 0 |
| 6:00 AM | 5 | 0 | 0 | 1 | 1 | 2 | 1 | 0 | 0 | 0 | 0 | 0 | 0 | 0 |
| 7:00 AM | 13 | 0 | 0 | 2 | 3 | 7 | 1 | 0 | 0 | 0 | 0 | 0 | 0 | 0 |
| 8:00 AM | 21 | 0 | 0 | 3 | 6 | 8 | 4 | 0 | 0 | 0 | 0 | 0 | 0 | 0 |
| 9:00 AM | 46 | 0 | 0 | 4 | 12 | 23 | 5 | 2 | 0 | 0 | 0 | 0 | 0 | 0 |
| 10:00 AM | 13 | 0 | 0 | 0 | 6 | 5 | 2 | 0 | 0 | 0 | 0 | 0 | 0 | 0 |
| 11:00 AM | - | - | - | - | - | - | - | - | - | - | - | - | - | - |
| 12:00 PM | - | - | - | - | - | - | - | - | - | - | - | - | - | - |
| 1:00 PM | - | - | - | - | - | - | - | - | - | - | - | - | - | - |
| 2:00 PM | - | - | - | - | - | - | - | - | - | - | - | - | - | - |
| 3:00 PM | - | - | - | - | - | - | - | - | - | - | - | - | - | - |
| Total | 540 | 0 | 0 | 34 | 186 | 270 | 44 | 4 | 2 | 0 | 0 | 0 | 0 | 0 |
| % | | 0.0 | 0.0 | 6.3 | 34.4 | 50.0 | 8.1 | 0.7 | 0.4 | 0.0 | 0.0 | 0.0 | 0.0 | 0.0 |

| Percentile Speeds | 10 % | 15 % | 50 % | 85 % | 90 % |
|---|---|---|---|---|---|
| (mph) | 25.9 | 27.1 | 30.7 | 34.1 | 34.9 |

| | | | |
|---|---|---|---|
| 10 mph Pace Speed | 25.6 - 35.6 | Average | 30.7 mph |
| Number in Pace | 464 (85.9 %) | Minimum | 20.3 mph |
| | | Maximum | 46.8 mph |

| Speeds Exceeded | 45 mph | 55 mph | 65 mph |
|---|---|---|---|
| | 0.4 % | 0.0 % | 0.0 % |
| Count | 2 | 0 | 0 |

# Appendix B

Synchro Analysis Results

| Movement | EBL | EBT | EBR | WBL | WBT | WBR | NBL | NBT | NBR | SBL | SBT | SBR |
|---|---|---|---|---|---|---|---|---|---|---|---|---|
| Lane Configurations | | | | | | | | | | | | |
| Volume (veh/h) | 7 | 300 | 20 | 43 | 329 | 10 | 112 | 6 | 111 | 3 | 7 | 5 |
| Number | 5 | 2 | 12 | 1 | 6 | 16 | 3 | 8 | 18 | 7 | 4 | 14 |
| Initial Q (Qb), veh | 0 | 0 | 0 | 0 | 0 | 0 | 0 | 0 | 0 | 0 | 0 | 0 |
| Ped-Bike Adj(A_pbT) | 1.00 | | 1.00 | 1.00 | | 1.00 | 1.00 | | 1.00 | 1.00 | | 1.00 |
| Parking Bus, Adj | 1.00 | 1.00 | 1.00 | 1.00 | 1.00 | 1.00 | 1.00 | 1.00 | 1.00 | 1.00 | 1.00 | 1.00 |
| Adj Sat Flow, veh/h/ln | 1593 | 1593 | 1625 | 1593 | 1593 | 1625 | 1593 | 1593 | 1625 | 1593 | 1593 | 1625 |
| Adj Flow Rate, veh/h | 9 | 405 | 23 | 56 | 427 | 10 | 137 | 7 | 34 | 4 | 9 | 2 |
| Adj No. of Lanes | 1 | 1 | 0 | 1 | 1 | 0 | 1 | 1 | 0 | 1 | 1 | 0 |
| Peak Hour Factor | 0.74 | 0.74 | 0.74 | 0.77 | 0.77 | 0.77 | 0.82 | 0.82 | 0.82 | 0.75 | 0.75 | 0.75 |
| Percent Heavy Veh, % | 2 | 2 | 2 | 2 | 2 | 2 | 2 | 2 | 2 | 2 | 2 | 2 |
| Cap, veh/h | 684 | 1075 | 61 | 691 | 1116 | 26 | 283 | 32 | 155 | 250 | 170 | 38 |
| Arrive On Green | 0.72 | 0.72 | 0.72 | 0.72 | 0.72 | 0.72 | 0.13 | 0.13 | 0.13 | 0.13 | 0.13 | 0.13 |
| Sat Flow, veh/h | 948 | 1493 | 85 | 956 | 1550 | 36 | 1398 | 237 | 1152 | 1360 | 1263 | 281 |
| Grp Volume(v), veh/h | 9 | 0 | 428 | 56 | 0 | 437 | 137 | 0 | 41 | 4 | 0 | 11 |
| Grp Sat Flow(s),veh/h/ln | 948 | 0 | 1578 | 956 | 0 | 1587 | 1398 | 0 | 1390 | 1360 | 0 | 1544 |
| Q Serve(g_s), s | 0.3 | 0.0 | 7.3 | 1.7 | 0.0 | 7.5 | 6.6 | 0.0 | 1.8 | 0.2 | 0.0 | 0.4 |
| Cycle Q Clear(g_c), s | 7.7 | 0.0 | 7.3 | 9.0 | 0.0 | 7.5 | 7.1 | 0.0 | 1.8 | 2.0 | 0.0 | 0.4 |
| Prop In Lane | 1.00 | | 0.05 | 1.00 | | 0.02 | 1.00 | | 0.83 | 1.00 | | 0.18 |
| Lane Grp Cap(c), veh/h | 684 | 0 | 1136 | 691 | 0 | 1142 | 283 | 0 | 187 | 250 | 0 | 208 |
| V/C Ratio(X) | 0.01 | 0.00 | 0.38 | 0.08 | 0.00 | 0.38 | 0.48 | 0.00 | 0.22 | 0.02 | 0.00 | 0.05 |
| Avail Cap(c_a), veh/h | 684 | 0 | 1136 | 691 | 0 | 1142 | 633 | 0 | 536 | 592 | 0 | 595 |
| HCM Platoon Ratio | 1.00 | 1.00 | 1.00 | 1.00 | 1.00 | 1.00 | 1.00 | 1.00 | 1.00 | 1.00 | 1.00 | 1.00 |
| Upstream Filter(I) | 1.00 | 0.00 | 1.00 | 1.00 | 0.00 | 1.00 | 1.00 | 0.00 | 1.00 | 1.00 | 0.00 | 1.00 |
| Uniform Delay (d), s/veh | 5.3 | 0.0 | 3.8 | 5.5 | 0.0 | 3.8 | 29.5 | 0.0 | 27.0 | 27.9 | 0.0 | 26.4 |
| Incr Delay (d2), s/veh | 0.0 | 0.0 | 1.0 | 0.2 | 0.0 | 1.0 | 1.3 | 0.0 | 0.6 | 0.0 | 0.0 | 0.1 |
| Initial Q Delay(d3),s/veh | 0.0 | 0.0 | 0.0 | 0.0 | 0.0 | 0.0 | 0.0 | 0.0 | 0.0 | 0.0 | 0.0 | 0.0 |
| %ile BackOfQ(50%),veh/ln | 0.1 | 0.0 | 3.4 | 0.5 | 0.0 | 3.5 | 2.7 | 0.0 | 0.7 | 0.1 | 0.0 | 0.2 |
| LnGrp Delay(d),s/veh | 5.3 | 0.0 | 4.7 | 5.7 | 0.0 | 4.8 | 30.8 | 0.0 | 27.6 | 27.9 | 0.0 | 26.5 |
| LnGrp LOS | A | | A | A | | A | C | | C | C | | C |
| Approach Vol, veh/h | | 437 | | | 493 | | | 178 | | | 15 | |
| Approach Delay, s/veh | | 4.7 | | | 4.9 | | | 30.0 | | | 26.9 | |
| Approach LOS | | A | | | A | | | C | | | C | |

| Timer | 1 | 2 | 3 | 4 | 5 | 6 | 7 | 8 |
|---|---|---|---|---|---|---|---|---|
| Assigned Phs | | 2 | | 4 | | 6 | | 8 |
| Phs Duration (G+Y+Rc), s | | 55.6 | | 14.4 | | 55.6 | | 14.4 |
| Change Period (Y+Rc), s | | * 5.2 | | 5.0 | | * 5.2 | | 5.0 |
| Max Green Setting (Gmax), s | | * 33 | | 27.0 | | * 33 | | 27.0 |
| Max Q Clear Time (g_c+I1), s | | 9.7 | | 4.0 | | 11.0 | | 9.1 |
| Green Ext Time (p_c), s | | 6.2 | | 0.6 | | 6.1 | | 0.6 |

| Intersection Summary | |
|---|---|
| HCM 2010 Ctrl Delay | 9.1 |
| HCM 2010 LOS | A |

Notes

* HCM 2010 computational engine requires equal clearance times for the phases crossing the barrier.

| Intersection | |
|---|---|
| Int Delay, s/veh | 0.4 |

| Movement | EBT | EBR | WBL | WBT | NBL | NBR |
|---|---|---|---|---|---|---|
| Vol, veh/h | 349 | 7 | 8 | 364 | 3 | 6 |
| Conflicting Peds, #/hr | 0 | 0 | 0 | 0 | 0 | 0 |
| Sign Control | Free | Free | Free | Free | Stop | Stop |
| RT Channelized | - | None | - | None | - | None |
| Storage Length | - | - | 0 | - | 0 | - |
| Veh in Median Storage, # | 0 | - | - | 0 | 0 | - |
| Grade, % | 0 | - | - | 0 | 0 | - |
| Peak Hour Factor | 88 | 88 | 74 | 74 | 45 | 45 |
| Heavy Vehicles, % | 2 | 2 | 2 | 2 | 2 | 2 |
| Mvmt Flow | 397 | 8 | 11 | 492 | 7 | 13 |

| Major/Minor | Major1 | | Major2 | | Minor1 | |
|---|---|---|---|---|---|---|
| Conflicting Flow All | 0 | 0 | 405 | 0 | 915 | 401 |
| Stage 1 | - | - | - | - | 401 | - |
| Stage 2 | - | - | - | - | 514 | - |
| Critical Hdwy | - | - | 4.12 | - | 6.42 | 6.22 |
| Critical Hdwy Stg 1 | - | - | - | - | 5.42 | - |
| Critical Hdwy Stg 2 | - | - | - | - | 5.42 | - |
| Follow-up Hdwy | - | - | 2.218 | - | 3.518 | 3.318 |
| Pot Cap-1 Maneuver | - | - | 1154 | - | 303 | 649 |
| Stage 1 | - | - | - | - | 676 | - |
| Stage 2 | - | - | - | - | 600 | - |
| Platoon blocked, % | - | - | | - | | |
| Mov Cap-1 Maneuver | - | - | 1154 | - | 300 | 649 |
| Mov Cap-2 Maneuver | - | - | - | - | 300 | - |
| Stage 1 | - | - | - | - | 676 | - |
| Stage 2 | - | - | - | - | 594 | - |

| Approach | EB | WB | NB |
|---|---|---|---|
| HCM Control Delay, s | 0 | 0.2 | 13 |
| HCM LOS | | | B |

| Minor Lane/Major Mvmt | NBLn1 | EBT | EBR | WBL | WBT |
|---|---|---|---|---|---|
| Capacity (veh/h) | 468 | - | - | 1154 | - |
| HCM Lane V/C Ratio | 0.043 | - | - | 0.009 | - |
| HCM Control Delay (s) | 13 | - | - | 8.1 | - |
| HCM Lane LOS | B | - | - | A | - |
| HCM 95th %tile Q(veh) | 0.1 | - | - | 0 | - |

| Intersection | |
|---|---|
| Int Delay, s/veh | 4 |

| Movement | WBL | WBR | NBT | NBR | SBL | SBT |
|---|---|---|---|---|---|---|
| Vol, veh/h | 3 | 71 | 70 | 3 | 15 | 38 |
| Conflicting Peds, #/hr | 0 | 0 | 0 | 0 | 0 | 0 |
| Sign Control | Stop | Stop | Free | Free | Free | Free |
| RT Channelized | - | None | - | None | - | None |
| Storage Length | 0 | - | - | - | 50 | - |
| Veh in Median Storage, # | 0 | - | 0 | - | - | 0 |
| Grade, % | 0 | - | 0 | - | - | 0 |
| Peak Hour Factor | 74 | 74 | 79 | 79 | 70 | 70 |
| Heavy Vehicles, % | 2 | 2 | 2 | 2 | 2 | 2 |
| Mvmt Flow | 4 | 96 | 89 | 4 | 21 | 54 |

| Major/Minor | Minor1 | | Major1 | | Major2 | |
|---|---|---|---|---|---|---|
| Conflicting Flow All | 188 | 91 | 0 | 0 | 92 | 0 |
| Stage 1 | 91 | - | - | - | - | - |
| Stage 2 | 97 | - | - | - | - | - |
| Critical Hdwy | 6.42 | 6.22 | - | - | 4.12 | - |
| Critical Hdwy Stg 1 | 5.42 | - | - | - | - | - |
| Critical Hdwy Stg 2 | 5.42 | - | - | - | - | - |
| Follow-up Hdwy | 3.518 | 3.318 | - | - | 2.218 | - |
| Pot Cap-1 Maneuver | 801 | 967 | - | - | 1503 | - |
| Stage 1 | 933 | - | - | - | - | - |
| Stage 2 | 927 | - | - | - | - | - |
| Platoon blocked, % | | | - | - | | - |
| Mov Cap-1 Maneuver | 790 | 967 | - | - | 1503 | - |
| Mov Cap-2 Maneuver | 790 | - | - | - | - | - |
| Stage 1 | 933 | - | - | - | - | - |
| Stage 2 | 914 | - | - | - | - | - |

| Approach | WB | NB | SB |
|---|---|---|---|
| HCM Control Delay, s | 9.2 | 0 | 2.1 |
| HCM LOS | A | | |

| Minor Lane/Major Mvmt | NBT | NBR | WBLn1 | SBL | SBT |
|---|---|---|---|---|---|
| Capacity (veh/h) | - | - | 958 | 1503 | - |
| HCM Lane V/C Ratio | - | - | 0.104 | 0.014 | - |
| HCM Control Delay (s) | - | - | 9.2 | 7.4 | - |
| HCM Lane LOS | - | - | A | A | - |
| HCM 95th %tile Q(veh) | - | - | 0.3 | 0 | - |

| Intersection | |
|---|---|
| Int Delay, s/veh | 1.9 |

| Movement | EBL | EBT | WBT | WBR | SBL | SBR |
|---|---|---|---|---|---|---|
| Vol, veh/h | 60 | 194 | 156 | 16 | 10 | 30 |
| Conflicting Peds, #/hr | 0 | 0 | 0 | 0 | 0 | 0 |
| Sign Control | Free | Free | Free | Free | Stop | Stop |
| RT Channelized | - | None | - | None | - | None |
| Storage Length | - | - | - | - | 0 | 0 |
| Veh in Median Storage, # | - | 0 | 0 | - | 0 | - |
| Grade, % | - | 0 | 0 | - | 0 | - |
| Peak Hour Factor | 92 | 92 | 72 | 72 | 77 | 77 |
| Heavy Vehicles, % | 2 | 2 | 2 | 2 | 2 | 2 |
| Mvmt Flow | 65 | 211 | 217 | 22 | 13 | 39 |

| Major/Minor | Major1 | | Major2 | | Minor2 | |
|---|---|---|---|---|---|---|
| Conflicting Flow All | 239 | 0 | - | 0 | 569 | 228 |
| Stage 1 | - | - | - | - | 228 | - |
| Stage 2 | - | - | - | - | 341 | - |
| Critical Hdwy | 4.12 | - | - | - | 6.42 | 6.22 |
| Critical Hdwy Stg 1 | - | - | - | - | 5.42 | - |
| Critical Hdwy Stg 2 | - | - | - | - | 5.42 | - |
| Follow-up Hdwy | 2.218 | - | - | - | 3.518 | 3.318 |
| Pot Cap-1 Maneuver | 1328 | - | - | - | 484 | 811 |
| Stage 1 | - | - | - | - | 810 | - |
| Stage 2 | - | - | - | - | 720 | - |
| Platoon blocked, % | | - | - | - | | |
| Mov Cap-1 Maneuver | 1328 | - | - | - | 457 | 811 |
| Mov Cap-2 Maneuver | - | - | - | - | 457 | - |
| Stage 1 | - | - | - | - | 810 | - |
| Stage 2 | - | - | - | - | 680 | - |

| Approach | EB | WB | SB |
|---|---|---|---|
| HCM Control Delay, s | 1.9 | 0 | 10.6 |
| HCM LOS | | | B |

| Minor Lane/Major Mvmt | EBL | EBT | WBT | WBR | SBLn1 | SBLn2 |
|---|---|---|---|---|---|---|
| Capacity (veh/h) | 1328 | - | - | - | 457 | 811 |
| HCM Lane V/C Ratio | 0.049 | - | - | - | 0.028 | 0.048 |
| HCM Control Delay (s) | 7.9 | 0 | - | - | 13.1 | 9.7 |
| HCM Lane LOS | A | A | - | - | B | A |
| HCM 95th %tile Q(veh) | 0.2 | - | - | - | 0.1 | 0.2 |

| Intersection | |
|---|---|
| Int Delay, s/veh | 1.5 |

| Movement | EBL | EBT | WBT | WBR | SBL | SBR |
|---|---|---|---|---|---|---|
| Vol, veh/h | 3 | 212 | 150 | 8 | 34 | 14 |
| Conflicting Peds, #/hr | 0 | 0 | 0 | 0 | 0 | 0 |
| Sign Control | Free | Free | Free | Free | Stop | Stop |
| RT Channelized | - | None | - | None | - | None |
| Storage Length | 0 | - | - | - | 0 | - |
| Veh in Median Storage, # | - | 0 | 0 | - | 0 | - |
| Grade, % | - | 0 | 0 | - | 0 | - |
| Peak Hour Factor | 84 | 84 | 81 | 81 | 71 | 71 |
| Heavy Vehicles, % | 2 | 2 | 2 | 2 | 2 | 2 |
| Mvmt Flow | 4 | 252 | 185 | 10 | 48 | 20 |

| Major/Minor | Major1 | | Major2 | | Minor2 | |
|---|---|---|---|---|---|---|
| Conflicting Flow All | 195 | 0 | - | 0 | 450 | 190 |
| Stage 1 | - | - | - | - | 190 | - |
| Stage 2 | - | - | - | - | 260 | - |
| Critical Hdwy | 4.12 | - | - | - | 6.42 | 6.22 |
| Critical Hdwy Stg 1 | - | - | - | - | 5.42 | - |
| Critical Hdwy Stg 2 | - | - | - | - | 5.42 | - |
| Follow-up Hdwy | 2.218 | - | - | - | 3.518 | 3.318 |
| Pot Cap-1 Maneuver | 1378 | - | - | - | 567 | 852 |
| Stage 1 | - | - | - | - | 842 | - |
| Stage 2 | - | - | - | - | 783 | - |
| Platoon blocked, % | | - | - | - | | |
| Mov Cap-1 Maneuver | 1378 | - | - | - | 565 | 852 |
| Mov Cap-2 Maneuver | - | - | - | - | 565 | - |
| Stage 1 | - | - | - | - | 842 | - |
| Stage 2 | - | - | - | - | 781 | - |

| Approach | EB | WB | SB |
|---|---|---|---|
| HCM Control Delay, s | 0.1 | 0 | 11.4 |
| HCM LOS | | | B |

| Minor Lane/Major Mvmt | EBL | EBT | WBT | WBR | SBLn1 |
|---|---|---|---|---|---|
| Capacity (veh/h) | 1378 | - | - | - | 627 |
| HCM Lane V/C Ratio | 0.003 | - | - | - | 0.108 |
| HCM Control Delay (s) | 7.6 | - | - | - | 11.4 |
| HCM Lane LOS | A | - | - | - | B |
| HCM 95th %tile Q(veh) | 0 | - | - | - | 0.4 |

| Movement | EBL | EBT | EBR | WBL | WBT | WBR | NBL | NBT | NBR | SBL | SBT | SBR |
|---|---|---|---|---|---|---|---|---|---|---|---|---|
| Lane Configurations | | | | | | | | | | | | |
| Volume (veh/h) | 3 | 441 | 80 | 139 | 291 | 9 | 53 | 8 | 68 | 4 | 10 | 5 |
| Number | 5 | 2 | 12 | 1 | 6 | 16 | 3 | 8 | 18 | 7 | 4 | 14 |
| Initial Q (Qb), veh | 0 | 0 | 0 | 0 | 0 | 0 | 0 | 0 | 0 | 0 | 0 | 0 |
| Ped-Bike Adj(A_pbT) | 1.00 | | 1.00 | 1.00 | | 1.00 | 1.00 | | 1.00 | 1.00 | | 1.00 |
| Parking Bus, Adj | 1.00 | 1.00 | 1.00 | 1.00 | 1.00 | 1.00 | 1.00 | 1.00 | 1.00 | 1.00 | 1.00 | 1.00 |
| Adj Sat Flow, veh/h/ln | 1593 | 1593 | 1625 | 1593 | 1593 | 1625 | 1593 | 1593 | 1625 | 1593 | 1593 | 1625 |
| Adj Flow Rate, veh/h | 4 | 519 | 85 | 156 | 327 | 8 | 56 | 8 | 26 | 6 | 15 | 1 |
| Adj No. of Lanes | 1 | 1 | 0 | 1 | 1 | 0 | 1 | 1 | 0 | 1 | 1 | 0 |
| Peak Hour Factor | 0.85 | 0.85 | 0.85 | 0.89 | 0.89 | 0.89 | 0.95 | 0.95 | 0.95 | 0.68 | 0.68 | 0.68 |
| Percent Heavy Veh, % | 2 | 2 | 2 | 2 | 2 | 2 | 2 | 2 | 2 | 2 | 2 | 2 |
| Cap, veh/h | 835 | 1023 | 167 | 604 | 1186 | 29 | 213 | 29 | 95 | 193 | 131 | 9 |
| Arrive On Green | 0.77 | 0.77 | 0.77 | 0.77 | 0.77 | 0.77 | 0.09 | 0.09 | 0.09 | 0.09 | 0.09 | 0.09 |
| Sat Flow, veh/h | 1041 | 1336 | 219 | 812 | 1549 | 38 | 1392 | 330 | 1073 | 1369 | 1477 | 98 |
| Grp Volume(v), veh/h | 4 | 0 | 604 | 156 | 0 | 335 | 56 | 0 | 34 | 6 | 0 | 16 |
| Grp Sat Flow(s),veh/h/ln | 1041 | 0 | 1555 | 812 | 0 | 1586 | 1392 | 0 | 1404 | 1369 | 0 | 1576 |
| Q Serve(g_s), s | 0.1 | 0.0 | 10.4 | 6.4 | 0.0 | 4.4 | 2.7 | 0.0 | 1.6 | 0.3 | 0.0 | 0.7 |
| Cycle Q Clear(g_c), s | 4.5 | 0.0 | 10.4 | 16.8 | 0.0 | 4.4 | 3.4 | 0.0 | 1.6 | 1.9 | 0.0 | 0.7 |
| Prop In Lane | 1.00 | | 0.14 | 1.00 | | 0.02 | 1.00 | | 0.76 | 1.00 | | 0.06 |
| Lane Grp Cap(c), veh/h | 835 | 0 | 1190 | 604 | 0 | 1215 | 213 | 0 | 124 | 193 | 0 | 140 |
| V/C Ratio(X) | 0.00 | 0.00 | 0.51 | 0.26 | 0.00 | 0.28 | 0.26 | 0.00 | 0.27 | 0.03 | 0.00 | 0.11 |
| Avail Cap(c_a), veh/h | 835 | 0 | 1190 | 604 | 0 | 1215 | 627 | 0 | 541 | 600 | 0 | 608 |
| HCM Platoon Ratio | 1.00 | 1.00 | 1.00 | 1.00 | 1.00 | 1.00 | 1.00 | 1.00 | 1.00 | 1.00 | 1.00 | 1.00 |
| Upstream Filter(I) | 1.00 | 0.00 | 1.00 | 1.00 | 0.00 | 1.00 | 1.00 | 0.00 | 1.00 | 1.00 | 0.00 | 1.00 |
| Uniform Delay (d), s/veh | 3.1 | 0.0 | 3.1 | 6.4 | 0.0 | 2.4 | 30.9 | 0.0 | 29.8 | 30.7 | 0.0 | 29.4 |
| Incr Delay (d2), s/veh | 0.0 | 0.0 | 1.5 | 1.0 | 0.0 | 0.6 | 0.6 | 0.0 | 1.2 | 0.1 | 0.0 | 0.4 |
| Initial Q Delay(d3),s/veh | 0.0 | 0.0 | 0.0 | 0.0 | 0.0 | 0.0 | 0.0 | 0.0 | 0.0 | 0.0 | 0.0 | 0.0 |
| %ile BackOfQ(50%),veh/ln | 0.0 | 0.0 | 4.9 | 1.6 | 0.0 | 2.1 | 1.1 | 0.0 | 0.7 | 0.1 | 0.0 | 0.3 |
| LnGrp Delay(d),s/veh | 3.1 | 0.0 | 4.7 | 7.4 | 0.0 | 3.0 | 31.6 | 0.0 | 31.0 | 30.7 | 0.0 | 29.7 |
| LnGrp LOS | A | | A | A | | A | C | | C | C | | C |
| Approach Vol, veh/h | | 608 | | | 491 | | | 90 | | | 22 | |
| Approach Delay, s/veh | | 4.7 | | | 4.4 | | | 31.3 | | | 30.0 | |
| Approach LOS | | A | | | A | | | C | | | C | |

| Timer | 1 | 2 | 3 | 4 | 5 | 6 | 7 | 8 |
|---|---|---|---|---|---|---|---|---|
| Assigned Phs | | 2 | | 4 | | 6 | | 8 |
| Phs Duration (G+Y+Rc), s | | 58.8 | | 11.2 | | 58.8 | | 11.2 |
| Change Period (Y+Rc), s | | * 5.2 | | 5.0 | | * 5.2 | | 5.0 |
| Max Green Setting (Gmax), s | | * 33 | | 27.0 | | * 33 | | 27.0 |
| Max Q Clear Time (g_c+I1), s | | 12.4 | | 3.9 | | 18.8 | | 5.4 |
| Green Ext Time (p_c), s | | 7.5 | | 0.4 | | 6.2 | | 0.4 |

| Intersection Summary | |
|---|---|
| HCM 2010 Ctrl Delay | 7.0 |
| HCM 2010 LOS | A |

Notes

* HCM 2010 computational engine requires equal clearance times for the phases crossing the barrier.

| Intersection | |
|---|---|
| Int Delay, s/veh | 0.2 |

| Movement | EBT | EBR | WBL | WBT | NBL | NBR |
|---|---|---|---|---|---|---|
| Vol, veh/h | 480 | 5 | 4 | 389 | 2 | 5 |
| Conflicting Peds, #/hr | 0 | 0 | 0 | 0 | 0 | 0 |
| Sign Control | Free | Free | Free | Free | Stop | Stop |
| RT Channelized | - | None | - | None | - | None |
| Storage Length | - | - | 0 | - | 0 | - |
| Veh in Median Storage, # | 0 | - | - | 0 | 0 | - |
| Grade, % | 0 | - | - | 0 | 0 | - |
| Peak Hour Factor | 93 | 93 | 91 | 91 | 58 | 58 |
| Heavy Vehicles, % | 2 | 2 | 2 | 2 | 2 | 2 |
| Mvmt Flow | 516 | 5 | 4 | 427 | 3 | 9 |

| Major/Minor | Major1 | | Major2 | | Minor1 | |
|---|---|---|---|---|---|---|
| Conflicting Flow All | 0 | 0 | 522 | 0 | 955 | 519 |
| Stage 1 | - | - | - | - | 519 | - |
| Stage 2 | - | - | - | - | 436 | - |
| Critical Hdwy | - | - | 4.12 | - | 6.42 | 6.22 |
| Critical Hdwy Stg 1 | - | - | - | - | 5.42 | - |
| Critical Hdwy Stg 2 | - | - | - | - | 5.42 | - |
| Follow-up Hdwy | - | - | 2.218 | - | 3.518 | 3.318 |
| Pot Cap-1 Maneuver | - | - | 1044 | - | 287 | 557 |
| Stage 1 | - | - | - | - | 597 | - |
| Stage 2 | - | - | - | - | 652 | - |
| Platoon blocked, % | - | - | | - | | |
| Mov Cap-1 Maneuver | - | - | 1044 | - | 286 | 557 |
| Mov Cap-2 Maneuver | - | - | - | - | 286 | - |
| Stage 1 | - | - | - | - | 597 | - |
| Stage 2 | - | - | - | - | 650 | - |

| Approach | EB | WB | NB |
|---|---|---|---|
| HCM Control Delay, s | 0 | 0.1 | 13.5 |
| HCM LOS | | | B |

| Minor Lane/Major Mvmt | NBLn1 | EBT | EBR | WBL | WBT |
|---|---|---|---|---|---|
| Capacity (veh/h) | 438 | - | - | 1044 | - |
| HCM Lane V/C Ratio | 0.028 | - | - | 0.004 | - |
| HCM Control Delay (s) | 13.5 | - | - | 8.5 | - |
| HCM Lane LOS | B | - | - | A | - |
| HCM 95th %tile Q(veh) | 0.1 | - | - | 0 | - |

| Intersection | |
|---|---|
| Int Delay, s/veh | 3.2 |

| Movement | WBL | WBR | NBT | NBR | SBL | SBT |
|---|---|---|---|---|---|---|
| Vol, veh/h | 1 | 21 | 58 | 5 | 67 | 80 |
| Conflicting Peds, #/hr | 0 | 0 | 0 | 0 | 0 | 0 |
| Sign Control | Stop | Stop | Free | Free | Free | Free |
| RT Channelized | - | None | - | None | - | None |
| Storage Length | 0 | - | - | - | 50 | - |
| Veh in Median Storage, # | 0 | - | 0 | - | - | 0 |
| Grade, % | 0 | - | 0 | - | - | 0 |
| Peak Hour Factor | 58 | 58 | 75 | 75 | 71 | 71 |
| Heavy Vehicles, % | 2 | 2 | 2 | 2 | 2 | 2 |
| Mvmt Flow | 2 | 36 | 77 | 7 | 94 | 113 |

| Major/Minor | Minor1 | | Major1 | | Major2 | |
|---|---|---|---|---|---|---|
| Conflicting Flow All | 382 | 81 | 0 | 0 | 84 | 0 |
| Stage 1 | 81 | - | - | - | - | - |
| Stage 2 | 301 | - | - | - | - | - |
| Critical Hdwy | 6.42 | 6.22 | - | - | 4.12 | - |
| Critical Hdwy Stg 1 | 5.42 | - | - | - | - | - |
| Critical Hdwy Stg 2 | 5.42 | - | - | - | - | - |
| Follow-up Hdwy | 3.518 | 3.318 | - | - | 2.218 | - |
| Pot Cap-1 Maneuver | 620 | 979 | - | - | 1513 | - |
| Stage 1 | 942 | - | - | - | - | - |
| Stage 2 | 751 | - | - | - | - | - |
| Platoon blocked, % | | | - | - | | - |
| Mov Cap-1 Maneuver | 581 | 979 | - | - | 1513 | - |
| Mov Cap-2 Maneuver | 581 | - | - | - | - | - |
| Stage 1 | 942 | - | - | - | - | - |
| Stage 2 | 704 | - | - | - | - | - |

| Approach | WB | NB | SB |
|---|---|---|---|
| HCM Control Delay, s | 9 | 0 | 3.4 |
| HCM LOS | A | | |

| Minor Lane/Major Mvmt | NBT | NBR | WBLn1 | SBL | SBT |
|---|---|---|---|---|---|
| Capacity (veh/h) | - | - | 949 | 1513 | - |
| HCM Lane V/C Ratio | - | - | 0.04 | 0.062 | - |
| HCM Control Delay (s) | - | - | 9 | 7.5 | - |
| HCM Lane LOS | - | - | A | A | - |
| HCM 95th %tile Q(veh) | - | - | 0.1 | 0.2 | - |

| Intersection | |
|---|---|
| Int Delay, s/veh | 2.2 |

| Movement | EBL | EBT | WBT | WBR | SBL | SBR |
|---|---|---|---|---|---|---|
| Vol, veh/h | 28 | 146 | 169 | 23 | 14 | 56 |
| Conflicting Peds, #/hr | 0 | 0 | 0 | 0 | 0 | 0 |
| Sign Control | Free | Free | Free | Free | Stop | Stop |
| RT Channelized | - | None | - | None | - | None |
| Storage Length | - | - | - | - | 0 | 0 |
| Veh in Median Storage, # | - | 0 | 0 | - | 0 | - |
| Grade, % | - | 0 | 0 | - | 0 | - |
| Peak Hour Factor | 87 | 87 | 89 | 89 | 80 | 80 |
| Heavy Vehicles, % | 2 | 2 | 2 | 2 | 2 | 2 |
| Mvmt Flow | 32 | 168 | 190 | 26 | 18 | 70 |

| Major/Minor | Major1 | | Major2 | | Minor2 | |
|---|---|---|---|---|---|---|
| Conflicting Flow All | 216 | 0 | - | 0 | 435 | 203 |
| Stage 1 | - | - | - | - | 203 | - |
| Stage 2 | - | - | - | - | 232 | - |
| Critical Hdwy | 4.12 | - | - | - | 6.42 | 6.22 |
| Critical Hdwy Stg 1 | - | - | - | - | 5.42 | - |
| Critical Hdwy Stg 2 | - | - | - | - | 5.42 | - |
| Follow-up Hdwy | 2.218 | - | - | - | 3.518 | 3.318 |
| Pot Cap-1 Maneuver | 1354 | - | - | - | 578 | 838 |
| Stage 1 | - | - | - | - | 831 | - |
| Stage 2 | - | - | - | - | 807 | - |
| Platoon blocked, % | | - | - | - | | |
| Mov Cap-1 Maneuver | 1354 | - | - | - | 563 | 838 |
| Mov Cap-2 Maneuver | - | - | - | - | 563 | - |
| Stage 1 | - | - | - | - | 831 | - |
| Stage 2 | - | - | - | - | 786 | - |

| Approach | EB | WB | SB |
|---|---|---|---|
| HCM Control Delay, s | 1.2 | 0 | 10.1 |
| HCM LOS | | | B |

| Minor Lane/Major Mvmt | EBL | EBT | WBT | WBR | SBLn1 | SBLn2 |
|---|---|---|---|---|---|---|
| Capacity (veh/h) | 1354 | - | - | - | 563 | 838 |
| HCM Lane V/C Ratio | 0.024 | - | - | - | 0.031 | 0.084 |
| HCM Control Delay (s) | 7.7 | 0 | - | - | 11.6 | 9.7 |
| HCM Lane LOS | A | A | - | - | B | A |
| HCM 95th %tile Q(veh) | 0.1 | - | - | - | 0.1 | 0.3 |

| Intersection | |
|---|---|
| Int Delay, s/veh | 1.1 |

| Movement | EBL | EBT | WBT | WBR | SBL | SBR |
|---|---|---|---|---|---|---|
| Vol, veh/h | 12 | 146 | 194 | 42 | 16 | 7 |
| Conflicting Peds, #/hr | 0 | 0 | 0 | 0 | 0 | 0 |
| Sign Control | Free | Free | Free | Free | Stop | Stop |
| RT Channelized | - | None | - | None | - | None |
| Storage Length | 0 | - | - | - | 0 | - |
| Veh in Median Storage, # | - | 0 | 0 | - | 0 | - |
| Grade, % | - | 0 | 0 | - | 0 | - |
| Peak Hour Factor | 90 | 90 | 92 | 92 | 64 | 64 |
| Heavy Vehicles, % | 2 | 2 | 2 | 2 | 2 | 2 |
| Mvmt Flow | 13 | 162 | 211 | 46 | 25 | 11 |

| Major/Minor | Major1 | | Major2 | | Minor2 | |
|---|---|---|---|---|---|---|
| Conflicting Flow All | 257 | 0 | - | 0 | 423 | 234 |
| Stage 1 | - | - | - | - | 234 | - |
| Stage 2 | - | - | - | - | 189 | - |
| Critical Hdwy | 4.12 | - | - | - | 6.42 | 6.22 |
| Critical Hdwy Stg 1 | - | - | - | - | 5.42 | - |
| Critical Hdwy Stg 2 | - | - | - | - | 5.42 | - |
| Follow-up Hdwy | 2.218 | - | - | - | 3.518 | 3.318 |
| Pot Cap-1 Maneuver | 1308 | - | - | - | 588 | 805 |
| Stage 1 | - | - | - | - | 805 | - |
| Stage 2 | - | - | - | - | 843 | - |
| Platoon blocked, % | | - | - | - | | |
| Mov Cap-1 Maneuver | 1308 | - | - | - | 582 | 805 |
| Mov Cap-2 Maneuver | - | - | - | - | 582 | - |
| Stage 1 | - | - | - | - | 805 | - |
| Stage 2 | - | - | - | - | 835 | - |

| Approach | EB | WB | SB |
|---|---|---|---|
| HCM Control Delay, s | 0.6 | 0 | 11 |
| HCM LOS | | | B |

| Minor Lane/Major Mvmt | EBL | EBT | WBT | WBR | SBLn1 |
|---|---|---|---|---|---|
| Capacity (veh/h) | 1308 | - | - | - | 636 |
| HCM Lane V/C Ratio | 0.01 | - | - | - | 0.057 |
| HCM Control Delay (s) | 7.8 | - | - | - | 11 |
| HCM Lane LOS | A | - | - | - | B |
| HCM 95th %tile Q(veh) | 0 | - | - | - | 0.2 |

| Movement | EBL | EBT | EBR | WBL | WBT | WBR | NBL | NBT | NBR | SBL | SBT | SBR |
|---|---|---|---|---|---|---|---|---|---|---|---|---|
| Lane Configurations | | | | | | | | | | | | |
| Volume (veh/h) | 7 | 306 | 20 | 44 | 336 | 10 | 114 | 6 | 113 | 3 | 7 | 5 |
| Number | 5 | 2 | 12 | 1 | 6 | 16 | 3 | 8 | 18 | 7 | 4 | 14 |
| Initial Q (Qb), veh | 0 | 0 | 0 | 0 | 0 | 0 | 0 | 0 | 0 | 0 | 0 | 0 |
| Ped-Bike Adj(A_pbT) | 1.00 | | 1.00 | 1.00 | | 1.00 | 1.00 | | 1.00 | 1.00 | | 1.00 |
| Parking Bus, Adj | 1.00 | 1.00 | 1.00 | 1.00 | 1.00 | 1.00 | 1.00 | 1.00 | 1.00 | 1.00 | 1.00 | 1.00 |
| Adj Sat Flow, veh/h/ln | 1593 | 1593 | 1625 | 1593 | 1593 | 1625 | 1593 | 1593 | 1625 | 1593 | 1593 | 1625 |
| Adj Flow Rate, veh/h | 9 | 414 | 23 | 57 | 436 | 10 | 139 | 7 | 37 | 4 | 9 | 2 |
| Adj No. of Lanes | 1 | 1 | 0 | 1 | 1 | 0 | 1 | 1 | 0 | 1 | 1 | 0 |
| Peak Hour Factor | 0.74 | 0.74 | 0.74 | 0.77 | 0.77 | 0.77 | 0.82 | 0.82 | 0.82 | 0.75 | 0.75 | 0.75 |
| Percent Heavy Veh, % | 2 | 2 | 2 | 2 | 2 | 2 | 2 | 2 | 2 | 2 | 2 | 2 |
| Cap, veh/h | 674 | 1073 | 60 | 681 | 1113 | 26 | 285 | 30 | 159 | 250 | 173 | 38 |
| Arrive On Green | 0.72 | 0.72 | 0.72 | 0.72 | 0.72 | 0.72 | 0.14 | 0.14 | 0.14 | 0.14 | 0.14 | 0.14 |
| Sat Flow, veh/h | 940 | 1495 | 83 | 948 | 1551 | 36 | 1398 | 221 | 1167 | 1357 | 1263 | 281 |
| Grp Volume(v), veh/h | 9 | 0 | 437 | 57 | 0 | 446 | 139 | 0 | 44 | 4 | 0 | 11 |
| Grp Sat Flow(s),veh/h/ln | 940 | 0 | 1578 | 948 | 0 | 1587 | 1398 | 0 | 1387 | 1357 | 0 | 1544 |
| Q Serve(g_s), s | 0.3 | 0.0 | 7.6 | 1.7 | 0.0 | 7.7 | 6.7 | 0.0 | 2.0 | 0.2 | 0.0 | 0.4 |
| Cycle Q Clear(g_c), s | 8.0 | 0.0 | 7.6 | 9.3 | 0.0 | 7.7 | 7.2 | 0.0 | 2.0 | 2.2 | 0.0 | 0.4 |
| Prop In Lane | 1.00 | | 0.05 | 1.00 | | 0.02 | 1.00 | | 0.84 | 1.00 | | 0.18 |
| Lane Grp Cap(c), veh/h | 674 | 0 | 1133 | 681 | 0 | 1139 | 285 | 0 | 190 | 250 | 0 | 211 |
| V/C Ratio(X) | 0.01 | 0.00 | 0.39 | 0.08 | 0.00 | 0.39 | 0.49 | 0.00 | 0.23 | 0.02 | 0.00 | 0.05 |
| Avail Cap(c_a), veh/h | 674 | 0 | 1133 | 681 | 0 | 1139 | 633 | 0 | 535 | 588 | 0 | 595 |
| HCM Platoon Ratio | 1.00 | 1.00 | 1.00 | 1.00 | 1.00 | 1.00 | 1.00 | 1.00 | 1.00 | 1.00 | 1.00 | 1.00 |
| Upstream Filter(I) | 1.00 | 0.00 | 1.00 | 1.00 | 0.00 | 1.00 | 1.00 | 0.00 | 1.00 | 1.00 | 0.00 | 1.00 |
| Uniform Delay (d), s/veh | 5.5 | 0.0 | 3.9 | 5.7 | 0.0 | 3.9 | 29.4 | 0.0 | 26.9 | 27.9 | 0.0 | 26.3 |
| Incr Delay (d2), s/veh | 0.0 | 0.0 | 1.0 | 0.2 | 0.0 | 1.0 | 1.3 | 0.0 | 0.6 | 0.0 | 0.0 | 0.1 |
| Initial Q Delay(d3),s/veh | 0.0 | 0.0 | 0.0 | 0.0 | 0.0 | 0.0 | 0.0 | 0.0 | 0.0 | 0.0 | 0.0 | 0.0 |
| %ile BackOfQ(50%),veh/ln | 0.1 | 0.0 | 3.5 | 0.5 | 0.0 | 3.7 | 2.7 | 0.0 | 0.8 | 0.1 | 0.0 | 0.2 |
| LnGrp Delay(d),s/veh | 5.5 | 0.0 | 4.9 | 5.9 | 0.0 | 4.9 | 30.7 | 0.0 | 27.6 | 27.9 | 0.0 | 26.4 |
| LnGrp LOS | A | | A | A | | A | C | | C | C | | C |
| Approach Vol, veh/h | | 446 | | | 503 | | | 183 | | | 15 | |
| Approach Delay, s/veh | | 4.9 | | | 5.0 | | | 29.9 | | | 26.8 | |
| Approach LOS | | A | | | A | | | C | | | C | |

| Timer | 1 | 2 | 3 | 4 | 5 | 6 | 7 | 8 |
|---|---|---|---|---|---|---|---|---|
| Assigned Phs | | 2 | | 4 | | 6 | | 8 |
| Phs Duration (G+Y+Rc), s | | 55.4 | | 14.6 | | 55.4 | | 14.6 |
| Change Period (Y+Rc), s | | * 5.2 | | 5.0 | | * 5.2 | | 5.0 |
| Max Green Setting (Gmax), s | | * 33 | | 27.0 | | * 33 | | 27.0 |
| Max Q Clear Time (g_c+I1), s | | 10.0 | | 4.2 | | 11.3 | | 9.2 |
| Green Ext Time (p_c), s | | 6.4 | | 0.7 | | 6.3 | | 0.6 |

| Intersection Summary | |
|---|---|
| HCM 2010 Ctrl Delay | 9.2 |
| HCM 2010 LOS | A |

Notes

* HCM 2010 computational engine requires equal clearance times for the phases crossing the barrier.

| Intersection | |
|---|---|
| Int Delay, s/veh | 0.4 |

| Movement | EBT | EBR | WBL | WBT | NBL | NBR |
|---|---|---|---|---|---|---|
| Vol, veh/h | 356 | 7 | 8 | 371 | 3 | 6 |
| Conflicting Peds, #/hr | 0 | 0 | 0 | 0 | 0 | 0 |
| Sign Control | Free | Free | Free | Free | Stop | Stop |
| RT Channelized | - | None | - | None | - | None |
| Storage Length | - | - | 0 | - | 0 | - |
| Veh in Median Storage, # | 0 | - | - | 0 | 0 | - |
| Grade, % | 0 | - | - | 0 | 0 | - |
| Peak Hour Factor | 88 | 88 | 74 | 74 | 45 | 45 |
| Heavy Vehicles, % | 2 | 2 | 2 | 2 | 2 | 2 |
| Mvmt Flow | 405 | 8 | 11 | 501 | 7 | 13 |

| Major/Minor | Major1 | | Major2 | | Minor1 | |
|---|---|---|---|---|---|---|
| Conflicting Flow All | 0 | 0 | 413 | 0 | 932 | 409 |
| Stage 1 | - | - | - | - | 409 | - |
| Stage 2 | - | - | - | - | 523 | - |
| Critical Hdwy | - | - | 4.12 | - | 6.42 | 6.22 |
| Critical Hdwy Stg 1 | - | - | - | - | 5.42 | - |
| Critical Hdwy Stg 2 | - | - | - | - | 5.42 | - |
| Follow-up Hdwy | - | - | 2.218 | - | 3.518 | 3.318 |
| Pot Cap-1 Maneuver | - | - | 1146 | - | 296 | 642 |
| Stage 1 | - | - | - | - | 671 | - |
| Stage 2 | - | - | - | - | 595 | - |
| Platoon blocked, % | - | - | | - | | |
| Mov Cap-1 Maneuver | - | - | 1146 | - | 293 | 642 |
| Mov Cap-2 Maneuver | - | - | - | - | 293 | - |
| Stage 1 | - | - | - | - | 671 | - |
| Stage 2 | - | - | - | - | 589 | - |

| Approach | EB | WB | NB |
|---|---|---|---|
| HCM Control Delay, s | 0 | 0.2 | 13.2 |
| HCM LOS | | | B |

| Minor Lane/Major Mvmt | NBLn1 | EBT | EBR | WBL | WBT |
|---|---|---|---|---|---|
| Capacity (veh/h) | 460 | - | - | 1146 | - |
| HCM Lane V/C Ratio | 0.043 | - | - | 0.009 | - |
| HCM Control Delay (s) | 13.2 | - | - | 8.2 | - |
| HCM Lane LOS | B | - | - | A | - |
| HCM 95th %tile Q(veh) | 0.1 | - | - | 0 | - |

| Intersection | |
|---|---|
| Int Delay, s/veh | 4 |

| Movement | WBL | WBR | NBT | NBR | SBL | SBT |
|---|---|---|---|---|---|---|
| Vol, veh/h | 3 | 71 | 71 | 3 | 15 | 39 |
| Conflicting Peds, #/hr | 0 | 0 | 0 | 0 | 0 | 0 |
| Sign Control | Stop | Stop | Free | Free | Free | Free |
| RT Channelized | - | None | - | None | - | None |
| Storage Length | 0 | - | - | - | 50 | - |
| Veh in Median Storage, # | 0 | - | 0 | - | - | 0 |
| Grade, % | 0 | - | 0 | - | - | 0 |
| Peak Hour Factor | 74 | 74 | 79 | 79 | 70 | 70 |
| Heavy Vehicles, % | 2 | 2 | 2 | 2 | 2 | 2 |
| Mvmt Flow | 4 | 96 | 90 | 4 | 21 | 56 |

| Major/Minor | Minor1 | | Major1 | | Major2 | |
|---|---|---|---|---|---|---|
| Conflicting Flow All | 191 | 92 | 0 | 0 | 94 | 0 |
| Stage 1 | 92 | - | - | - | - | - |
| Stage 2 | 99 | - | - | - | - | - |
| Critical Hdwy | 6.42 | 6.22 | - | - | 4.12 | - |
| Critical Hdwy Stg 1 | 5.42 | - | - | - | - | - |
| Critical Hdwy Stg 2 | 5.42 | - | - | - | - | - |
| Follow-up Hdwy | 3.518 | 3.318 | - | - | 2.218 | - |
| Pot Cap-1 Maneuver | 798 | 965 | - | - | 1500 | - |
| Stage 1 | 932 | - | - | - | - | - |
| Stage 2 | 925 | - | - | - | - | - |
| Platoon blocked, % | | | - | - | | - |
| Mov Cap-1 Maneuver | 787 | 965 | - | - | 1500 | - |
| Mov Cap-2 Maneuver | 787 | - | - | - | - | - |
| Stage 1 | 932 | - | - | - | - | - |
| Stage 2 | 912 | - | - | - | - | - |

| Approach | WB | NB | SB |
|---|---|---|---|
| HCM Control Delay, s | 9.2 | 0 | 2.1 |
| HCM LOS | A | | |

| Minor Lane/Major Mvmt | NBT | NBR | WBLn1 | SBL | SBT |
|---|---|---|---|---|---|
| Capacity (veh/h) | - | - | 956 | 1500 | - |
| HCM Lane V/C Ratio | - | - | 0.105 | 0.014 | - |
| HCM Control Delay (s) | - | - | 9.2 | 7.4 | - |
| HCM Lane LOS | - | - | A | A | - |
| HCM 95th %tile Q(veh) | - | - | 0.3 | 0 | - |

| Intersection | |
|---|---|
| Int Delay, s/veh | 1.9 |

| Movement | EBL | EBT | WBT | WBR | SBL | SBR |
|---|---|---|---|---|---|---|
| Vol, veh/h | 61 | 198 | 159 | 16 | 10 | 31 |
| Conflicting Peds, #/hr | 0 | 0 | 0 | 0 | 0 | 0 |
| Sign Control | Free | Free | Free | Free | Stop | Stop |
| RT Channelized | - | None | - | None | - | None |
| Storage Length | - | - | - | - | 0 | 0 |
| Veh in Median Storage, # | - | 0 | 0 | - | 0 | - |
| Grade, % | - | 0 | 0 | - | 0 | - |
| Peak Hour Factor | 92 | 92 | 72 | 72 | 77 | 77 |
| Heavy Vehicles, % | 2 | 2 | 2 | 2 | 2 | 2 |
| Mvmt Flow | 66 | 215 | 221 | 22 | 13 | 40 |

| Major/Minor | Major1 | | Major2 | | Minor2 | |
|---|---|---|---|---|---|---|
| Conflicting Flow All | 243 | 0 | - | 0 | 580 | 232 |
| Stage 1 | - | - | - | - | 232 | - |
| Stage 2 | - | - | - | - | 348 | - |
| Critical Hdwy | 4.12 | - | - | - | 6.42 | 6.22 |
| Critical Hdwy Stg 1 | - | - | - | - | 5.42 | - |
| Critical Hdwy Stg 2 | - | - | - | - | 5.42 | - |
| Follow-up Hdwy | 2.218 | - | - | - | 3.518 | 3.318 |
| Pot Cap-1 Maneuver | 1323 | - | - | - | 477 | 807 |
| Stage 1 | - | - | - | - | 807 | - |
| Stage 2 | - | - | - | - | 715 | - |
| Platoon blocked, % | | - | - | - | | |
| Mov Cap-1 Maneuver | 1323 | - | - | - | 450 | 807 |
| Mov Cap-2 Maneuver | - | - | - | - | 450 | - |
| Stage 1 | - | - | - | - | 807 | - |
| Stage 2 | - | - | - | - | 674 | - |

| Approach | EB | WB | SB |
|---|---|---|---|
| HCM Control Delay, s | 1.9 | 0 | 10.6 |
| HCM LOS | | | B |

| Minor Lane/Major Mvmt | EBL | EBT | WBT | WBR | SBLn1 | SBLn2 |
|---|---|---|---|---|---|---|
| Capacity (veh/h) | 1323 | - | - | - | 450 | 807 |
| HCM Lane V/C Ratio | 0.05 | - | - | - | 0.029 | 0.05 |
| HCM Control Delay (s) | 7.9 | 0 | - | - | 13.2 | 9.7 |
| HCM Lane LOS | A | A | - | - | B | A |
| HCM 95th %tile Q(veh) | 0.2 | - | - | - | 0.1 | 0.2 |

| Intersection | |
|---|---|
| Int Delay, s/veh | 1.5 |

| Movement | EBL | EBT | WBT | WBR | SBL | SBR |
|---|---|---|---|---|---|---|
| Vol, veh/h | 3 | 216 | 153 | 8 | 34 | 14 |
| Conflicting Peds, #/hr | 0 | 0 | 0 | 0 | 0 | 0 |
| Sign Control | Free | Free | Free | Free | Stop | Stop |
| RT Channelized | - | None | - | None | - | None |
| Storage Length | 0 | - | - | - | 0 | - |
| Veh in Median Storage, # | - | 0 | 0 | - | 0 | - |
| Grade, % | - | 0 | 0 | - | 0 | - |
| Peak Hour Factor | 84 | 84 | 81 | 81 | 71 | 71 |
| Heavy Vehicles, % | 2 | 2 | 2 | 2 | 2 | 2 |
| Mvmt Flow | 4 | 257 | 189 | 10 | 48 | 20 |

| Major/Minor | Major1 | | Major2 | | Minor2 | |
|---|---|---|---|---|---|---|
| Conflicting Flow All | 199 | 0 | - | 0 | 458 | 194 |
| Stage 1 | - | - | - | - | 194 | - |
| Stage 2 | - | - | - | - | 264 | - |
| Critical Hdwy | 4.12 | - | - | - | 6.42 | 6.22 |
| Critical Hdwy Stg 1 | - | - | - | - | 5.42 | - |
| Critical Hdwy Stg 2 | - | - | - | - | 5.42 | - |
| Follow-up Hdwy | 2.218 | - | - | - | 3.518 | 3.318 |
| Pot Cap-1 Maneuver | 1373 | - | - | - | 561 | 847 |
| Stage 1 | - | - | - | - | 839 | - |
| Stage 2 | - | - | - | - | 780 | - |
| Platoon blocked, % | | - | - | - | | |
| Mov Cap-1 Maneuver | 1373 | - | - | - | 559 | 847 |
| Mov Cap-2 Maneuver | - | - | - | - | 559 | - |
| Stage 1 | - | - | - | - | 839 | - |
| Stage 2 | - | - | - | - | 778 | - |

| Approach | EB | WB | SB |
|---|---|---|---|
| HCM Control Delay, s | 0.1 | 0 | 11.5 |
| HCM LOS | | | B |

| Minor Lane/Major Mvmt | EBL | EBT | WBT | WBR | SBLn1 |
|---|---|---|---|---|---|
| Capacity (veh/h) | 1373 | - | - | - | 621 |
| HCM Lane V/C Ratio | 0.003 | - | - | - | 0.109 |
| HCM Control Delay (s) | 7.6 | - | - | - | 11.5 |
| HCM Lane LOS | A | - | - | - | B |
| HCM 95th %tile Q(veh) | 0 | - | - | - | 0.4 |

| Movement | EBL | EBT | EBR | WBL | WBT | WBR | NBL | NBT | NBR | SBL | SBT | SBR |
|---|---|---|---|---|---|---|---|---|---|---|---|---|
| Lane Configurations | | | | | | | | | | | | |
| Volume (veh/h) | 3 | 450 | 82 | 142 | 297 | 9 | 54 | 8 | 69 | 4 | 10 | 5 |
| Number | 5 | 2 | 12 | 1 | 6 | 16 | 3 | 8 | 18 | 7 | 4 | 14 |
| Initial Q (Qb), veh | 0 | 0 | 0 | 0 | 0 | 0 | 0 | 0 | 0 | 0 | 0 | 0 |
| Ped-Bike Adj(A_pbT) | 1.00 | | 1.00 | 1.00 | | 1.00 | 1.00 | | 1.00 | 1.00 | | 1.00 |
| Parking Bus, Adj | 1.00 | 1.00 | 1.00 | 1.00 | 1.00 | 1.00 | 1.00 | 1.00 | 1.00 | 1.00 | 1.00 | 1.00 |
| Adj Sat Flow, veh/h/ln | 1593 | 1593 | 1625 | 1593 | 1593 | 1625 | 1593 | 1593 | 1625 | 1593 | 1593 | 1625 |
| Adj Flow Rate, veh/h | 4 | 529 | 87 | 160 | 334 | 8 | 57 | 8 | 27 | 6 | 15 | 1 |
| Adj No. of Lanes | 1 | 1 | 0 | 1 | 1 | 0 | 1 | 1 | 0 | 1 | 1 | 0 |
| Peak Hour Factor | 0.85 | 0.85 | 0.85 | 0.89 | 0.89 | 0.89 | 0.95 | 0.95 | 0.95 | 0.68 | 0.68 | 0.68 |
| Percent Heavy Veh, % | 2 | 2 | 2 | 2 | 2 | 2 | 2 | 2 | 2 | 2 | 2 | 2 |
| Cap, veh/h | 828 | 1021 | 168 | 594 | 1186 | 28 | 214 | 29 | 96 | 193 | 132 | 9 |
| Arrive On Green | 0.77 | 0.77 | 0.77 | 0.77 | 0.77 | 0.77 | 0.09 | 0.09 | 0.09 | 0.09 | 0.09 | 0.09 |
| Sat Flow, veh/h | 1034 | 1335 | 220 | 803 | 1549 | 37 | 1392 | 321 | 1082 | 1368 | 1477 | 98 |
| Grp Volume(v), veh/h | 4 | 0 | 616 | 160 | 0 | 342 | 57 | 0 | 35 | 6 | 0 | 16 |
| Grp Sat Flow(s),veh/h/ln | 1034 | 0 | 1554 | 803 | 0 | 1587 | 1392 | 0 | 1402 | 1368 | 0 | 1576 |
| Q Serve(g_s), s | 0.1 | 0.0 | 10.8 | 6.8 | 0.0 | 4.5 | 2.8 | 0.0 | 1.6 | 0.3 | 0.0 | 0.7 |
| Cycle Q Clear(g_c), s | 4.6 | 0.0 | 10.8 | 17.6 | 0.0 | 4.5 | 3.4 | 0.0 | 1.6 | 1.9 | 0.0 | 0.7 |
| Prop In Lane | 1.00 | | 0.14 | 1.00 | | 0.02 | 1.00 | | 0.77 | 1.00 | | 0.06 |
| Lane Grp Cap(c), veh/h | 828 | 0 | 1189 | 594 | 0 | 1214 | 214 | 0 | 125 | 193 | 0 | 140 |
| V/C Ratio(X) | 0.00 | 0.00 | 0.52 | 0.27 | 0.00 | 0.28 | 0.27 | 0.00 | 0.28 | 0.03 | 0.00 | 0.11 |
| Avail Cap(c_a), veh/h | 828 | 0 | 1189 | 594 | 0 | 1214 | 627 | 0 | 541 | 599 | 0 | 608 |
| HCM Platoon Ratio | 1.00 | 1.00 | 1.00 | 1.00 | 1.00 | 1.00 | 1.00 | 1.00 | 1.00 | 1.00 | 1.00 | 1.00 |
| Upstream Filter(I) | 1.00 | 0.00 | 1.00 | 1.00 | 0.00 | 1.00 | 1.00 | 0.00 | 1.00 | 1.00 | 0.00 | 1.00 |
| Uniform Delay (d), s/veh | 3.1 | 0.0 | 3.2 | 6.6 | 0.0 | 2.5 | 30.9 | 0.0 | 29.8 | 30.7 | 0.0 | 29.3 |
| Incr Delay (d2), s/veh | 0.0 | 0.0 | 1.6 | 1.1 | 0.0 | 0.6 | 0.7 | 0.0 | 1.2 | 0.1 | 0.0 | 0.4 |
| Initial Q Delay(d3),s/veh | 0.0 | 0.0 | 0.0 | 0.0 | 0.0 | 0.0 | 0.0 | 0.0 | 0.0 | 0.0 | 0.0 | 0.0 |
| %ile BackOfQ(50%),veh/ln | 0.0 | 0.0 | 5.0 | 1.7 | 0.0 | 2.1 | 1.1 | 0.0 | 0.7 | 0.1 | 0.0 | 0.3 |
| LnGrp Delay(d),s/veh | 3.2 | 0.0 | 4.8 | 7.7 | 0.0 | 3.0 | 31.6 | 0.0 | 31.0 | 30.7 | 0.0 | 29.7 |
| LnGrp LOS | A | | A | A | | A | C | | C | C | | C |
| Approach Vol, veh/h | | 620 | | | 502 | | | 92 | | | 22 | |
| Approach Delay, s/veh | | 4.8 | | | 4.5 | | | 31.3 | | | 30.0 | |
| Approach LOS | | A | | | A | | | C | | | C | |

| Timer | 1 | 2 | 3 | 4 | 5 | 6 | 7 | 8 |
|---|---|---|---|---|---|---|---|---|
| Assigned Phs | | 2 | | 4 | | 6 | | 8 |
| Phs Duration (G+Y+Rc), s | | 58.8 | | 11.2 | | 58.8 | | 11.2 |
| Change Period (Y+Rc), s | | * 5.2 | | 5.0 | | * 5.2 | | 5.0 |
| Max Green Setting (Gmax), s | | * 33 | | 27.0 | | * 33 | | 27.0 |
| Max Q Clear Time (g_c+I1), s | | 12.8 | | 3.9 | | 19.6 | | 5.4 |
| Green Ext Time (p_c), s | | 7.7 | | 0.4 | | 6.2 | | 0.4 |

| Intersection Summary | |
|---|---|
| HCM 2010 Ctrl Delay | 7.1 |
| HCM 2010 LOS | A |

Notes

* HCM 2010 computational engine requires equal clearance times for the phases crossing the barrier.

| Intersection | |
|---|---|
| Int Delay, s/veh | 0.2 |

| Movement | EBT | EBR | WBL | WBT | NBL | NBR |
|---|---|---|---|---|---|---|
| Vol, veh/h | 490 | 5 | 4 | 397 | 2 | 5 |
| Conflicting Peds, #/hr | 0 | 0 | 0 | 0 | 0 | 0 |
| Sign Control | Free | Free | Free | Free | Stop | Stop |
| RT Channelized | - | None | - | None | - | None |
| Storage Length | - | - | 0 | - | 0 | - |
| Veh in Median Storage, # | 0 | - | - | 0 | 0 | - |
| Grade, % | 0 | - | - | 0 | 0 | - |
| Peak Hour Factor | 93 | 93 | 91 | 91 | 58 | 58 |
| Heavy Vehicles, % | 2 | 2 | 2 | 2 | 2 | 2 |
| Mvmt Flow | 527 | 5 | 4 | 436 | 3 | 9 |

| Major/Minor | Major1 | | Major2 | | Minor1 | |
|---|---|---|---|---|---|---|
| Conflicting Flow All | 0 | 0 | 532 | 0 | 975 | 530 |
| Stage 1 | - | - | - | - | 530 | - |
| Stage 2 | - | - | - | - | 445 | - |
| Critical Hdwy | - | - | 4.12 | - | 6.42 | 6.22 |
| Critical Hdwy Stg 1 | - | - | - | - | 5.42 | - |
| Critical Hdwy Stg 2 | - | - | - | - | 5.42 | - |
| Follow-up Hdwy | - | - | 2.218 | - | 3.518 | 3.318 |
| Pot Cap-1 Maneuver | - | - | 1036 | - | 279 | 549 |
| Stage 1 | - | - | - | - | 590 | - |
| Stage 2 | - | - | - | - | 646 | - |
| Platoon blocked, % | - | - | | - | | |
| Mov Cap-1 Maneuver | - | - | 1036 | - | 278 | 549 |
| Mov Cap-2 Maneuver | - | - | - | - | 278 | - |
| Stage 1 | - | - | - | - | 590 | - |
| Stage 2 | - | - | - | - | 644 | - |

| Approach | EB | WB | NB |
|---|---|---|---|
| HCM Control Delay, s | 0 | 0.1 | 13.6 |
| HCM LOS | | | B |

| Minor Lane/Major Mvmt | NBLn1 | EBT | EBR | WBL | WBT |
|---|---|---|---|---|---|
| Capacity (veh/h) | 429 | - | - | 1036 | - |
| HCM Lane V/C Ratio | 0.028 | - | - | 0.004 | - |
| HCM Control Delay (s) | 13.6 | - | - | 8.5 | - |
| HCM Lane LOS | B | - | - | A | - |
| HCM 95th %tile Q(veh) | 0.1 | - | - | 0 | - |

| Intersection | |
|---|---|
| Int Delay, s/veh | 3.2 |

| Movement | WBL | WBR | NBT | NBR | SBL | SBT |
|---|---|---|---|---|---|---|
| Vol, veh/h | 1 | 21 | 59 | 5 | 67 | 82 |
| Conflicting Peds, #/hr | 0 | 0 | 0 | 0 | 0 | 0 |
| Sign Control | Stop | Stop | Free | Free | Free | Free |
| RT Channelized | - | None | - | None | - | None |
| Storage Length | 0 | - | - | - | 50 | - |
| Veh in Median Storage, # | 0 | - | 0 | - | - | 0 |
| Grade, % | 0 | - | 0 | - | - | 0 |
| Peak Hour Factor | 58 | 58 | 75 | 75 | 71 | 71 |
| Heavy Vehicles, % | 2 | 2 | 2 | 2 | 2 | 2 |
| Mvmt Flow | 2 | 36 | 79 | 7 | 94 | 115 |

| Major/Minor | Minor1 | | Major1 | | Major2 | |
|---|---|---|---|---|---|---|
| Conflicting Flow All | 386 | 82 | 0 | 0 | 85 | 0 |
| Stage 1 | 82 | - | - | - | - | - |
| Stage 2 | 304 | - | - | - | - | - |
| Critical Hdwy | 6.42 | 6.22 | - | - | 4.12 | - |
| Critical Hdwy Stg 1 | 5.42 | - | - | - | - | - |
| Critical Hdwy Stg 2 | 5.42 | - | - | - | - | - |
| Follow-up Hdwy | 3.518 | 3.318 | - | - | 2.218 | - |
| Pot Cap-1 Maneuver | 617 | 978 | - | - | 1512 | - |
| Stage 1 | 941 | - | - | - | - | - |
| Stage 2 | 748 | - | - | - | - | - |
| Platoon blocked, % | | | - | - | | - |
| Mov Cap-1 Maneuver | 579 | 978 | - | - | 1512 | - |
| Mov Cap-2 Maneuver | 579 | - | - | - | - | - |
| Stage 1 | 941 | - | - | - | - | - |
| Stage 2 | 701 | - | - | - | - | - |

| Approach | WB | NB | SB |
|---|---|---|---|
| HCM Control Delay, s | 9 | 0 | 3.4 |
| HCM LOS | A | | |

| Minor Lane/Major Mvmt | NBT | NBR | WBLn1 | SBL | SBT |
|---|---|---|---|---|---|
| Capacity (veh/h) | - | - | 948 | 1512 | - |
| HCM Lane V/C Ratio | - | - | 0.04 | 0.062 | - |
| HCM Control Delay (s) | - | - | 9 | 7.5 | - |
| HCM Lane LOS | - | - | A | A | - |
| HCM 95th %tile Q(veh) | - | - | 0.1 | 0.2 | - |

| Intersection | |
|---|---|
| Int Delay, s/veh | 2.3 |

| Movement | EBL | EBT | WBT | WBR | SBL | SBR |
|---|---|---|---|---|---|---|
| Vol, veh/h | 29 | 149 | 172 | 23 | 14 | 57 |
| Conflicting Peds, #/hr | 0 | 0 | 0 | 0 | 0 | 0 |
| Sign Control | Free | Free | Free | Free | Stop | Stop |
| RT Channelized | - | None | - | None | - | None |
| Storage Length | - | - | - | - | 0 | 0 |
| Veh in Median Storage, # | - | 0 | 0 | - | 0 | - |
| Grade, % | - | 0 | 0 | - | 0 | - |
| Peak Hour Factor | 87 | 87 | 89 | 89 | 80 | 80 |
| Heavy Vehicles, % | 2 | 2 | 2 | 2 | 2 | 2 |
| Mvmt Flow | 33 | 171 | 193 | 26 | 18 | 71 |

| Major/Minor | Major1 | | Major2 | | Minor2 | |
|---|---|---|---|---|---|---|
| Conflicting Flow All | 219 | 0 | - | 0 | 444 | 206 |
| Stage 1 | - | - | - | - | 206 | - |
| Stage 2 | - | - | - | - | 238 | - |
| Critical Hdwy | 4.12 | - | - | - | 6.42 | 6.22 |
| Critical Hdwy Stg 1 | - | - | - | - | 5.42 | - |
| Critical Hdwy Stg 2 | - | - | - | - | 5.42 | - |
| Follow-up Hdwy | 2.218 | - | - | - | 3.518 | 3.318 |
| Pot Cap-1 Maneuver | 1350 | - | - | - | 571 | 835 |
| Stage 1 | - | - | - | - | 829 | - |
| Stage 2 | - | - | - | - | 802 | - |
| Platoon blocked, % | | - | - | - | | |
| Mov Cap-1 Maneuver | 1350 | - | - | - | 556 | 835 |
| Mov Cap-2 Maneuver | - | - | - | - | 556 | - |
| Stage 1 | - | - | - | - | 829 | - |
| Stage 2 | - | - | - | - | 780 | - |

| Approach | EB | WB | SB |
|---|---|---|---|
| HCM Control Delay, s | 1.3 | 0 | 10.1 |
| HCM LOS | | | B |

| Minor Lane/Major Mvmt | EBL | EBT | WBT | WBR | SBLn1 | SBLn2 |
|---|---|---|---|---|---|---|
| Capacity (veh/h) | 1350 | - | - | - | 556 | 835 |
| HCM Lane V/C Ratio | 0.025 | - | - | - | 0.031 | 0.085 |
| HCM Control Delay (s) | 7.7 | 0 | - | - | 11.7 | 9.7 |
| HCM Lane LOS | A | A | - | - | B | A |
| HCM 95th %tile Q(veh) | 0.1 | - | - | - | 0.1 | 0.3 |

| Intersection | |
|---|---|
| Int Delay, s/veh | 1.1 |

| Movement | EBL | EBT | WBT | WBR | SBL | SBR |
|---|---|---|---|---|---|---|
| Vol, veh/h | 12 | 149 | 198 | 42 | 16 | 7 |
| Conflicting Peds, #/hr | 0 | 0 | 0 | 0 | 0 | 0 |
| Sign Control | Free | Free | Free | Free | Stop | Stop |
| RT Channelized | - | None | - | None | - | None |
| Storage Length | 0 | - | - | - | 0 | - |
| Veh in Median Storage, # | - | 0 | 0 | - | 0 | - |
| Grade, % | - | 0 | 0 | - | 0 | - |
| Peak Hour Factor | 90 | 90 | 92 | 92 | 64 | 64 |
| Heavy Vehicles, % | 2 | 2 | 2 | 2 | 2 | 2 |
| Mvmt Flow | 13 | 166 | 215 | 46 | 25 | 11 |

| Major/Minor | Major1 | | Major2 | | Minor2 | |
|---|---|---|---|---|---|---|
| Conflicting Flow All | 261 | 0 | - | 0 | 430 | 238 |
| Stage 1 | - | - | - | - | 238 | - |
| Stage 2 | - | - | - | - | 192 | - |
| Critical Hdwy | 4.12 | - | - | - | 6.42 | 6.22 |
| Critical Hdwy Stg 1 | - | - | - | - | 5.42 | - |
| Critical Hdwy Stg 2 | - | - | - | - | 5.42 | - |
| Follow-up Hdwy | 2.218 | - | - | - | 3.518 | 3.318 |
| Pot Cap-1 Maneuver | 1303 | - | - | - | 582 | 801 |
| Stage 1 | - | - | - | - | 802 | - |
| Stage 2 | - | - | - | - | 841 | - |
| Platoon blocked, % | | - | - | - | | |
| Mov Cap-1 Maneuver | 1303 | - | - | - | 576 | 801 |
| Mov Cap-2 Maneuver | - | - | - | - | 576 | - |
| Stage 1 | - | - | - | - | 802 | - |
| Stage 2 | - | - | - | - | 833 | - |

| Approach | EB | WB | SB |
|---|---|---|---|
| HCM Control Delay, s | 0.6 | 0 | 11.1 |
| HCM LOS | | | B |

| Minor Lane/Major Mvmt | EBL | EBT | WBT | WBR | SBLn1 |
|---|---|---|---|---|---|
| Capacity (veh/h) | 1303 | - | - | - | 630 |
| HCM Lane V/C Ratio | 0.01 | - | - | - | 0.057 |
| HCM Control Delay (s) | 7.8 | - | - | - | 11.1 |
| HCM Lane LOS | A | - | - | - | B |
| HCM 95th %tile Q(veh) | 0 | - | - | - | 0.2 |

| Movement | EBL | EBT | EBR | WBL | WBT | WBR | NBL | NBT | NBR | SBL | SBT | SBR |
|---|---|---|---|---|---|---|---|---|---|---|---|---|
| Lane Configurations | | | | | | | | | | | | |
| Volume (veh/h) | 7 | 306 | 25 | 49 | 336 | 10 | 131 | 9 | 132 | 3 | 8 | 5 |
| Number | 5 | 2 | 12 | 1 | 6 | 16 | 3 | 8 | 18 | 7 | 4 | 14 |
| Initial Q (Qb), veh | 0 | 0 | 0 | 0 | 0 | 0 | 0 | 0 | 0 | 0 | 0 | 0 |
| Ped-Bike Adj(A_pbT) | 1.00 | | 1.00 | 1.00 | | 1.00 | 1.00 | | 1.00 | 1.00 | | 1.00 |
| Parking Bus, Adj | 1.00 | 1.00 | 1.00 | 1.00 | 1.00 | 1.00 | 1.00 | 1.00 | 1.00 | 1.00 | 1.00 | 1.00 |
| Adj Sat Flow, veh/h/ln | 1593 | 1593 | 1625 | 1593 | 1593 | 1625 | 1593 | 1593 | 1625 | 1593 | 1593 | 1625 |
| Adj Flow Rate, veh/h | 9 | 414 | 30 | 64 | 436 | 10 | 160 | 11 | 60 | 4 | 11 | 2 |
| Adj No. of Lanes | 1 | 1 | 0 | 1 | 1 | 0 | 1 | 1 | 0 | 1 | 1 | 0 |
| Peak Hour Factor | 0.74 | 0.74 | 0.74 | 0.77 | 0.77 | 0.77 | 0.82 | 0.82 | 0.82 | 0.75 | 0.75 | 0.75 |
| Percent Heavy Veh, % | 2 | 2 | 2 | 2 | 2 | 2 | 2 | 2 | 2 | 2 | 2 | 2 |
| Cap, veh/h | 648 | 1024 | 74 | 648 | 1082 | 25 | 311 | 34 | 183 | 250 | 205 | 37 |
| Arrive On Green | 0.70 | 0.70 | 0.70 | 0.70 | 0.70 | 0.70 | 0.16 | 0.16 | 0.16 | 0.16 | 0.16 | 0.16 |
| Sat Flow, veh/h | 940 | 1468 | 106 | 942 | 1551 | 36 | 1395 | 215 | 1172 | 1324 | 1312 | 239 |
| Grp Volume(v), veh/h | 9 | 0 | 444 | 64 | 0 | 446 | 160 | 0 | 71 | 4 | 0 | 13 |
| Grp Sat Flow(s),veh/h/ln | 940 | 0 | 1574 | 942 | 0 | 1587 | 1395 | 0 | 1386 | 1324 | 0 | 1551 |
| Q Serve(g_s), s | 0.3 | 0.0 | 8.3 | 2.1 | 0.0 | 8.3 | 7.7 | 0.0 | 3.2 | 0.2 | 0.0 | 0.5 |
| Cycle Q Clear(g_c), s | 8.6 | 0.0 | 8.3 | 10.5 | 0.0 | 8.3 | 8.2 | 0.0 | 3.2 | 3.4 | 0.0 | 0.5 |
| Prop In Lane | 1.00 | | 0.07 | 1.00 | | 0.02 | 1.00 | | 0.85 | 1.00 | | 0.15 |
| Lane Grp Cap(c), veh/h | 648 | 0 | 1099 | 648 | 0 | 1107 | 311 | 0 | 217 | 250 | 0 | 243 |
| V/C Ratio(X) | 0.01 | 0.00 | 0.40 | 0.10 | 0.00 | 0.40 | 0.51 | 0.00 | 0.33 | 0.02 | 0.00 | 0.05 |
| Avail Cap(c_a), veh/h | 648 | 0 | 1099 | 648 | 0 | 1107 | 631 | 0 | 535 | 553 | 0 | 598 |
| HCM Platoon Ratio | 1.00 | 1.00 | 1.00 | 1.00 | 1.00 | 1.00 | 1.00 | 1.00 | 1.00 | 1.00 | 1.00 | 1.00 |
| Upstream Filter(I) | 1.00 | 0.00 | 1.00 | 1.00 | 0.00 | 1.00 | 1.00 | 0.00 | 1.00 | 1.00 | 0.00 | 1.00 |
| Uniform Delay (d), s/veh | 6.2 | 0.0 | 4.5 | 6.7 | 0.0 | 4.4 | 28.6 | 0.0 | 26.2 | 27.7 | 0.0 | 25.1 |
| Incr Delay (d2), s/veh | 0.0 | 0.0 | 1.1 | 0.3 | 0.0 | 1.1 | 1.3 | 0.0 | 0.9 | 0.0 | 0.0 | 0.1 |
| Initial Q Delay(d3),s/veh | 0.0 | 0.0 | 0.0 | 0.0 | 0.0 | 0.0 | 0.0 | 0.0 | 0.0 | 0.0 | 0.0 | 0.0 |
| %ile BackOfQ(50%),veh/ln | 0.1 | 0.0 | 3.9 | 0.6 | 0.0 | 3.9 | 3.1 | 0.0 | 1.3 | 0.1 | 0.0 | 0.2 |
| LnGrp Delay(d),s/veh | 6.3 | 0.0 | 5.6 | 7.0 | 0.0 | 5.5 | 29.9 | 0.0 | 27.1 | 27.8 | 0.0 | 25.2 |
| LnGrp LOS | A | | A | A | | A | C | | C | C | | C |
| Approach Vol, veh/h | | 453 | | | 510 | | | 231 | | | 17 | |
| Approach Delay, s/veh | | 5.6 | | | 5.7 | | | 29.1 | | | 25.8 | |
| Approach LOS | | A | | | A | | | C | | | C | |

| Timer | 1 | 2 | 3 | 4 | 5 | 6 | 7 | 8 |
|---|---|---|---|---|---|---|---|---|
| Assigned Phs | | 2 | | 4 | | 6 | | 8 |
| Phs Duration (G+Y+Rc), s | | 54.0 | | 16.0 | | 54.0 | | 16.0 |
| Change Period (Y+Rc), s | | * 5.2 | | 5.0 | | * 5.2 | | 5.0 |
| Max Green Setting (Gmax), s | | * 33 | | 27.0 | | * 33 | | 27.0 |
| Max Q Clear Time (g_c+I1), s | | 10.6 | | 5.4 | | 12.5 | | 10.2 |
| Green Ext Time (p_c), s | | 6.4 | | 0.9 | | 6.2 | | 0.8 |

| Intersection Summary | |
|---|---|
| HCM 2010 Ctrl Delay | 10.4 |
| HCM 2010 LOS | B |

Notes

* HCM 2010 computational engine requires equal clearance times for the phases crossing the barrier.

| Intersection | |
|---|---|
| Int Delay, s/veh | 0.4 |

| Movement | EBT | EBR | WBL | WBT | NBL | NBR |
|---|---|---|---|---|---|---|
| Vol, veh/h | 375 | 7 | 8 | 376 | 3 | 6 |
| Conflicting Peds, #/hr | 0 | 0 | 0 | 0 | 0 | 0 |
| Sign Control | Free | Free | Free | Free | Stop | Stop |
| RT Channelized | - | None | - | None | - | None |
| Storage Length | - | - | 0 | - | 0 | - |
| Veh in Median Storage, # | 0 | - | - | 0 | 0 | - |
| Grade, % | 0 | - | - | 0 | 0 | - |
| Peak Hour Factor | 88 | 88 | 74 | 74 | 45 | 45 |
| Heavy Vehicles, % | 2 | 2 | 2 | 2 | 2 | 2 |
| Mvmt Flow | 426 | 8 | 11 | 508 | 7 | 13 |

| Major/Minor | Major1 | | Major2 | | Minor1 | |
|---|---|---|---|---|---|---|
| Conflicting Flow All | 0 | 0 | 434 | 0 | 960 | 430 |
| Stage 1 | - | - | - | - | 430 | - |
| Stage 2 | - | - | - | - | 530 | - |
| Critical Hdwy | - | - | 4.12 | - | 6.42 | 6.22 |
| Critical Hdwy Stg 1 | - | - | - | - | 5.42 | - |
| Critical Hdwy Stg 2 | - | - | - | - | 5.42 | - |
| Follow-up Hdwy | - | - | 2.218 | - | 3.518 | 3.318 |
| Pot Cap-1 Maneuver | - | - | 1126 | - | 285 | 625 |
| Stage 1 | - | - | - | - | 656 | - |
| Stage 2 | - | - | - | - | 590 | - |
| Platoon blocked, % | - | - | | - | | |
| Mov Cap-1 Maneuver | - | - | 1126 | - | 282 | 625 |
| Mov Cap-2 Maneuver | - | - | - | - | 282 | - |
| Stage 1 | - | - | - | - | 656 | - |
| Stage 2 | - | - | - | - | 584 | - |

| Approach | EB | WB | NB |
|---|---|---|---|
| HCM Control Delay, s | 0 | 0.2 | 13.5 |
| HCM LOS | | | B |

| Minor Lane/Major Mvmt | NBLn1 | EBT | EBR | WBL | WBT |
|---|---|---|---|---|---|
| Capacity (veh/h) | 445 | - | - | 1126 | - |
| HCM Lane V/C Ratio | 0.045 | - | - | 0.01 | - |
| HCM Control Delay (s) | 13.5 | - | - | 8.2 | - |
| HCM Lane LOS | B | - | - | A | - |
| HCM 95th %tile Q(veh) | 0.1 | - | - | 0 | - |

| Intersection | |
|---|---|
| Int Delay, s/veh | 5.1 |

| Movement | WBL | WBR | NBT | NBR | SBL | SBT |
|---|---|---|---|---|---|---|
| Vol, veh/h | 3 | 109 | 71 | 3 | 25 | 39 |
| Conflicting Peds, #/hr | 0 | 0 | 0 | 0 | 0 | 0 |
| Sign Control | Stop | Stop | Free | Free | Free | Free |
| RT Channelized | - | None | - | None | - | None |
| Storage Length | 0 | - | - | - | 50 | - |
| Veh in Median Storage, # | 0 | - | 0 | - | - | 0 |
| Grade, % | 0 | - | 0 | - | - | 0 |
| Peak Hour Factor | 74 | 74 | 79 | 79 | 70 | 70 |
| Heavy Vehicles, % | 2 | 2 | 2 | 2 | 2 | 2 |
| Mvmt Flow | 4 | 147 | 90 | 4 | 36 | 56 |

| Major/Minor | Minor1 | | Major1 | | Major2 | |
|---|---|---|---|---|---|---|
| Conflicting Flow All | 219 | 92 | 0 | 0 | 94 | 0 |
| Stage 1 | 92 | - | - | - | - | - |
| Stage 2 | 127 | - | - | - | - | - |
| Critical Hdwy | 6.42 | 6.22 | - | - | 4.12 | - |
| Critical Hdwy Stg 1 | 5.42 | - | - | - | - | - |
| Critical Hdwy Stg 2 | 5.42 | - | - | - | - | - |
| Follow-up Hdwy | 3.518 | 3.318 | - | - | 2.218 | - |
| Pot Cap-1 Maneuver | 769 | 965 | - | - | 1500 | - |
| Stage 1 | 932 | - | - | - | - | - |
| Stage 2 | 899 | - | - | - | - | - |
| Platoon blocked, % | | | - | - | | - |
| Mov Cap-1 Maneuver | 751 | 965 | - | - | 1500 | - |
| Mov Cap-2 Maneuver | 751 | - | - | - | - | - |
| Stage 1 | 932 | - | - | - | - | - |
| Stage 2 | 877 | - | - | - | - | - |

| Approach | WB | NB | SB |
|---|---|---|---|
| HCM Control Delay, s | 9.5 | 0 | 2.9 |
| HCM LOS | A | | |

| Minor Lane/Major Mvmt | NBT | NBR | WBLn1 | SBL | SBT |
|---|---|---|---|---|---|
| Capacity (veh/h) | - | - | 958 | 1500 | - |
| HCM Lane V/C Ratio | - | - | 0.158 | 0.024 | - |
| HCM Control Delay (s) | - | - | 9.5 | 7.5 | - |
| HCM Lane LOS | - | - | A | A | - |
| HCM 95th %tile Q(veh) | - | - | 0.6 | 0.1 | - |

| Intersection | |
|---|---|
| Int Delay, s/veh | 2 |

| Movement | EBL | EBT | WBT | WBR | SBL | SBR |
|---|---|---|---|---|---|---|
| Vol, veh/h | 62 | 199 | 163 | 16 | 10 | 35 |
| Conflicting Peds, #/hr | 0 | 0 | 0 | 0 | 0 | 0 |
| Sign Control | Free | Free | Free | Free | Stop | Stop |
| RT Channelized | - | None | - | None | - | None |
| Storage Length | - | - | - | - | 0 | 0 |
| Veh in Median Storage, # | - | 0 | 0 | - | 0 | - |
| Grade, % | - | 0 | 0 | - | 0 | - |
| Peak Hour Factor | 92 | 92 | 72 | 72 | 77 | 77 |
| Heavy Vehicles, % | 2 | 2 | 2 | 2 | 2 | 2 |
| Mvmt Flow | 67 | 216 | 226 | 22 | 13 | 45 |

| Major/Minor | Major1 | | Major2 | | Minor2 | |
|---|---|---|---|---|---|---|
| Conflicting Flow All | 249 | 0 | - | 0 | 589 | 238 |
| Stage 1 | - | - | - | - | 238 | - |
| Stage 2 | - | - | - | - | 351 | - |
| Critical Hdwy | 4.12 | - | - | - | 6.42 | 6.22 |
| Critical Hdwy Stg 1 | - | - | - | - | 5.42 | - |
| Critical Hdwy Stg 2 | - | - | - | - | 5.42 | - |
| Follow-up Hdwy | 2.218 | - | - | - | 3.518 | 3.318 |
| Pot Cap-1 Maneuver | 1317 | - | - | - | 471 | 801 |
| Stage 1 | - | - | - | - | 802 | - |
| Stage 2 | - | - | - | - | 713 | - |
| Platoon blocked, % | | - | - | - | | |
| Mov Cap-1 Maneuver | 1317 | - | - | - | 444 | 801 |
| Mov Cap-2 Maneuver | - | - | - | - | 444 | - |
| Stage 1 | - | - | - | - | 802 | - |
| Stage 2 | - | - | - | - | 672 | - |

| Approach | EB | WB | SB |
|---|---|---|---|
| HCM Control Delay, s | 1.9 | 0 | 10.6 |
| HCM LOS | | | B |

| Minor Lane/Major Mvmt | EBL | EBT | WBT | WBR | SBLn1 | SBLn2 |
|---|---|---|---|---|---|---|
| Capacity (veh/h) | 1317 | - | - | - | 444 | 801 |
| HCM Lane V/C Ratio | 0.051 | - | - | - | 0.029 | 0.057 |
| HCM Control Delay (s) | 7.9 | 0 | - | - | 13.4 | 9.8 |
| HCM Lane LOS | A | A | - | - | B | A |
| HCM 95th %tile Q(veh) | 0.2 | - | - | - | 0.1 | 0.2 |

| Intersection | |
|---|---|
| Int Delay, s/veh | 1.9 |

| Movement | EBL | EBT | WBT | WBR | SBL | SBR |
|---|---|---|---|---|---|---|
| Vol, veh/h | 4 | 216 | 153 | 10 | 42 | 18 |
| Conflicting Peds, #/hr | 0 | 0 | 0 | 0 | 0 | 0 |
| Sign Control | Free | Free | Free | Free | Stop | Stop |
| RT Channelized | - | None | - | None | - | None |
| Storage Length | 0 | - | - | - | 0 | - |
| Veh in Median Storage, # | - | 0 | 0 | - | 0 | - |
| Grade, % | - | 0 | 0 | - | 0 | - |
| Peak Hour Factor | 84 | 84 | 81 | 81 | 71 | 71 |
| Heavy Vehicles, % | 2 | 2 | 2 | 2 | 2 | 2 |
| Mvmt Flow | 5 | 257 | 189 | 12 | 59 | 25 |

| Major/Minor | Major1 | | Major2 | | Minor2 | |
|---|---|---|---|---|---|---|
| Conflicting Flow All | 201 | 0 | - | 0 | 462 | 195 |
| Stage 1 | - | - | - | - | 195 | - |
| Stage 2 | - | - | - | - | 267 | - |
| Critical Hdwy | 4.12 | - | - | - | 6.42 | 6.22 |
| Critical Hdwy Stg 1 | - | - | - | - | 5.42 | - |
| Critical Hdwy Stg 2 | - | - | - | - | 5.42 | - |
| Follow-up Hdwy | 2.218 | - | - | - | 3.518 | 3.318 |
| Pot Cap-1 Maneuver | 1371 | - | - | - | 558 | 846 |
| Stage 1 | - | - | - | - | 838 | - |
| Stage 2 | - | - | - | - | 778 | - |
| Platoon blocked, % | | - | - | - | | |
| Mov Cap-1 Maneuver | 1371 | - | - | - | 556 | 846 |
| Mov Cap-2 Maneuver | - | - | - | - | 556 | - |
| Stage 1 | - | - | - | - | 838 | - |
| Stage 2 | - | - | - | - | 775 | - |

| Approach | EB | WB | SB |
|---|---|---|---|
| HCM Control Delay, s | 0.1 | 0 | 11.7 |
| HCM LOS | | | B |

| Minor Lane/Major Mvmt | EBL | EBT | WBT | WBR | SBLn1 |
|---|---|---|---|---|---|
| Capacity (veh/h) | 1371 | - | - | - | 620 |
| HCM Lane V/C Ratio | 0.003 | - | - | - | 0.136 |
| HCM Control Delay (s) | 7.6 | - | - | - | 11.7 |
| HCM Lane LOS | A | - | - | - | B |
| HCM 95th %tile Q(veh) | 0 | - | - | - | 0.5 |

| Movement | EBL | EBT | EBR | WBL | WBT | WBR | NBL | NBT | NBR | SBL | SBT | SBR |
|---|---|---|---|---|---|---|---|---|---|---|---|---|
| Lane Configurations | | | | | | | | | | | | |
| Volume (veh/h) | 3 | 450 | 98 | 161 | 297 | 9 | 63 | 10 | 80 | 4 | 13 | 5 |
| Number | 5 | 2 | 12 | 1 | 6 | 16 | 3 | 8 | 18 | 7 | 4 | 14 |
| Initial Q (Qb), veh | 0 | 0 | 0 | 0 | 0 | 0 | 0 | 0 | 0 | 0 | 0 | 0 |
| Ped-Bike Adj(A_pbT) | 1.00 | | 1.00 | 1.00 | | 1.00 | 1.00 | | 1.00 | 1.00 | | 1.00 |
| Parking Bus, Adj | 1.00 | 1.00 | 1.00 | 1.00 | 1.00 | 1.00 | 1.00 | 1.00 | 1.00 | 1.00 | 1.00 | 1.00 |
| Adj Sat Flow, veh/h/ln | 1593 | 1593 | 1625 | 1593 | 1593 | 1625 | 1593 | 1593 | 1625 | 1593 | 1593 | 1625 |
| Adj Flow Rate, veh/h | 4 | 529 | 106 | 181 | 334 | 8 | 66 | 11 | 38 | 6 | 19 | 1 |
| Adj No. of Lanes | 1 | 1 | 0 | 1 | 1 | 0 | 1 | 1 | 0 | 1 | 1 | 0 |
| Peak Hour Factor | 0.85 | 0.85 | 0.85 | 0.89 | 0.89 | 0.89 | 0.95 | 0.95 | 0.95 | 0.68 | 0.68 | 0.68 |
| Percent Heavy Veh, % | 2 | 2 | 2 | 2 | 2 | 2 | 2 | 2 | 2 | 2 | 2 | 2 |
| Cap, veh/h | 822 | 981 | 197 | 572 | 1179 | 28 | 216 | 29 | 102 | 185 | 140 | 7 |
| Arrive On Green | 0.76 | 0.76 | 0.76 | 0.76 | 0.76 | 0.76 | 0.09 | 0.09 | 0.09 | 0.09 | 0.09 | 0.09 |
| Sat Flow, veh/h | 1034 | 1289 | 258 | 789 | 1549 | 37 | 1386 | 315 | 1087 | 1351 | 1500 | 79 |
| Grp Volume(v), veh/h | 4 | 0 | 635 | 181 | 0 | 342 | 66 | 0 | 49 | 6 | 0 | 20 |
| Grp Sat Flow(s),veh/h/ln | 1034 | 0 | 1548 | 789 | 0 | 1587 | 1386 | 0 | 1401 | 1351 | 0 | 1579 |
| Q Serve(g_s), s | 0.1 | 0.0 | 11.7 | 8.5 | 0.0 | 4.6 | 3.2 | 0.0 | 2.3 | 0.3 | 0.0 | 0.8 |
| Cycle Q Clear(g_c), s | 4.7 | 0.0 | 11.7 | 20.1 | 0.0 | 4.6 | 4.0 | 0.0 | 2.3 | 2.6 | 0.0 | 0.8 |
| Prop In Lane | 1.00 | | 0.17 | 1.00 | | 0.02 | 1.00 | | 0.78 | 1.00 | | 0.05 |
| Lane Grp Cap(c), veh/h | 822 | 0 | 1177 | 572 | 0 | 1207 | 216 | 0 | 131 | 185 | 0 | 148 |
| V/C Ratio(X) | 0.00 | 0.00 | 0.54 | 0.32 | 0.00 | 0.28 | 0.30 | 0.00 | 0.37 | 0.03 | 0.00 | 0.14 |
| Avail Cap(c_a), veh/h | 822 | 0 | 1177 | 572 | 0 | 1207 | 622 | 0 | 541 | 579 | 0 | 609 |
| HCM Platoon Ratio | 1.00 | 1.00 | 1.00 | 1.00 | 1.00 | 1.00 | 1.00 | 1.00 | 1.00 | 1.00 | 1.00 | 1.00 |
| Upstream Filter(I) | 1.00 | 0.00 | 1.00 | 1.00 | 0.00 | 1.00 | 1.00 | 0.00 | 1.00 | 1.00 | 0.00 | 1.00 |
| Uniform Delay (d), s/veh | 3.3 | 0.0 | 3.4 | 7.5 | 0.0 | 2.6 | 31.0 | 0.0 | 29.8 | 31.0 | 0.0 | 29.1 |
| Incr Delay (d2), s/veh | 0.0 | 0.0 | 1.8 | 1.5 | 0.0 | 0.6 | 0.8 | 0.0 | 1.8 | 0.1 | 0.0 | 0.4 |
| Initial Q Delay(d3),s/veh | 0.0 | 0.0 | 0.0 | 0.0 | 0.0 | 0.0 | 0.0 | 0.0 | 0.0 | 0.0 | 0.0 | 0.0 |
| %ile BackOfQ(50%),veh/ln | 0.0 | 0.0 | 5.3 | 2.0 | 0.0 | 2.2 | 1.3 | 0.0 | 0.9 | 0.1 | 0.0 | 0.4 |
| LnGrp Delay(d),s/veh | 3.3 | 0.0 | 5.2 | 8.9 | 0.0 | 3.1 | 31.8 | 0.0 | 31.6 | 31.1 | 0.0 | 29.5 |
| LnGrp LOS | A | | A | A | | A | C | | C | C | | C |
| Approach Vol, veh/h | | 639 | | | 523 | | | 115 | | | 26 | |
| Approach Delay, s/veh | | 5.2 | | | 5.1 | | | 31.7 | | | 29.9 | |
| Approach LOS | | A | | | A | | | C | | | C | |

| Timer | 1 | 2 | 3 | 4 | 5 | 6 | 7 | 8 |
|---|---|---|---|---|---|---|---|---|
| Assigned Phs | | 2 | | 4 | | 6 | | 8 |
| Phs Duration (G+Y+Rc), s | | 58.5 | | 11.5 | | 58.5 | | 11.5 |
| Change Period (Y+Rc), s | | * 5.2 | | 5.0 | | * 5.2 | | 5.0 |
| Max Green Setting (Gmax), s | | * 33 | | 27.0 | | * 33 | | 27.0 |
| Max Q Clear Time (g_c+I1), s | | 13.7 | | 4.6 | | 22.1 | | 6.0 |
| Green Ext Time (p_c), s | | 7.9 | | 0.5 | | 5.6 | | 0.5 |

| Intersection Summary | |
|---|---|
| HCM 2010 Ctrl Delay | 8.0 |
| HCM 2010 LOS | A |

Notes

* HCM 2010 computational engine requires equal clearance times for the phases crossing the barrier.

| Intersection | |
|---|---|
| Int Delay, s/veh | 0.2 |

| Movement | EBT | EBR | WBL | WBT | NBL | NBR |
|---|---|---|---|---|---|---|
| Vol, veh/h | 500 | 5 | 4 | 416 | 2 | 5 |
| Conflicting Peds, #/hr | 0 | 0 | 0 | 0 | 0 | 0 |
| Sign Control | Free | Free | Free | Free | Stop | Stop |
| RT Channelized | - | None | - | None | - | None |
| Storage Length | - | - | 0 | - | 0 | - |
| Veh in Median Storage, # | 0 | - | - | 0 | 0 | - |
| Grade, % | 0 | - | - | 0 | 0 | - |
| Peak Hour Factor | 93 | 93 | 91 | 91 | 58 | 58 |
| Heavy Vehicles, % | 2 | 2 | 2 | 2 | 2 | 2 |
| Mvmt Flow | 538 | 5 | 4 | 457 | 3 | 9 |

| Major/Minor | Major1 | | Major2 | | Minor1 | |
|---|---|---|---|---|---|---|
| Conflicting Flow All | 0 | 0 | 543 | 0 | 1006 | 540 |
| Stage 1 | - | - | - | - | 540 | - |
| Stage 2 | - | - | - | - | 466 | - |
| Critical Hdwy | - | - | 4.12 | - | 6.42 | 6.22 |
| Critical Hdwy Stg 1 | - | - | - | - | 5.42 | - |
| Critical Hdwy Stg 2 | - | - | - | - | 5.42 | - |
| Follow-up Hdwy | - | - | 2.218 | - | 3.518 | 3.318 |
| Pot Cap-1 Maneuver | - | - | 1026 | - | 267 | 542 |
| Stage 1 | - | - | - | - | 584 | - |
| Stage 2 | - | - | - | - | 632 | - |
| Platoon blocked, % | - | - | | - | | |
| Mov Cap-1 Maneuver | - | - | 1026 | - | 266 | 542 |
| Mov Cap-2 Maneuver | - | - | - | - | 266 | - |
| Stage 1 | - | - | - | - | 584 | - |
| Stage 2 | - | - | - | - | 630 | - |

| Approach | EB | WB | NB |
|---|---|---|---|
| HCM Control Delay, s | 0 | 0.1 | 13.9 |
| HCM LOS | | | B |

| Minor Lane/Major Mvmt | NBLn1 | EBT | EBR | WBL | WBT |
|---|---|---|---|---|---|
| Capacity (veh/h) | 418 | - | - | 1026 | - |
| HCM Lane V/C Ratio | 0.029 | - | - | 0.004 | - |
| HCM Control Delay (s) | 13.9 | - | - | 8.5 | - |
| HCM Lane LOS | B | - | - | A | - |
| HCM 95th %tile Q(veh) | 0.1 | - | - | 0 | - |

| Intersection | |
|---|---|
| Int Delay, s/veh | 4.3 |

| Movement | WBL | WBR | NBT | NBR | SBL | SBT |
|---|---|---|---|---|---|---|
| Vol, veh/h | 1 | 41 | 59 | 5 | 105 | 82 |
| Conflicting Peds, #/hr | 0 | 0 | 0 | 0 | 0 | 0 |
| Sign Control | Stop | Stop | Free | Free | Free | Free |
| RT Channelized | - | None | - | None | - | None |
| Storage Length | 0 | - | - | - | 50 | - |
| Veh in Median Storage, # | 0 | - | 0 | - | - | 0 |
| Grade, % | 0 | - | 0 | - | - | 0 |
| Peak Hour Factor | 58 | 58 | 75 | 75 | 71 | 71 |
| Heavy Vehicles, % | 2 | 2 | 2 | 2 | 2 | 2 |
| Mvmt Flow | 2 | 71 | 79 | 7 | 148 | 115 |

| Major/Minor | Minor1 | | Major1 | | Major2 | |
|---|---|---|---|---|---|---|
| Conflicting Flow All | 493 | 82 | 0 | 0 | 85 | 0 |
| Stage 1 | 82 | - | - | - | - | - |
| Stage 2 | 411 | - | - | - | - | - |
| Critical Hdwy | 6.42 | 6.22 | - | - | 4.12 | - |
| Critical Hdwy Stg 1 | 5.42 | - | - | - | - | - |
| Critical Hdwy Stg 2 | 5.42 | - | - | - | - | - |
| Follow-up Hdwy | 3.518 | 3.318 | - | - | 2.218 | - |
| Pot Cap-1 Maneuver | 535 | 978 | - | - | 1512 | - |
| Stage 1 | 941 | - | - | - | - | - |
| Stage 2 | 669 | - | - | - | - | - |
| Platoon blocked, % | | | - | - | | - |
| Mov Cap-1 Maneuver | 483 | 978 | - | - | 1512 | - |
| Mov Cap-2 Maneuver | 483 | - | - | - | - | - |
| Stage 1 | 941 | - | - | - | - | - |
| Stage 2 | 604 | - | - | - | - | - |

| Approach | WB | NB | SB |
|---|---|---|---|
| HCM Control Delay, s | 9.1 | 0 | 4.3 |
| HCM LOS | A | | |

| Minor Lane/Major Mvmt | NBT | NBR | WBLn1 | SBL | SBT |
|---|---|---|---|---|---|
| Capacity (veh/h) | - | - | 955 | 1512 | - |
| HCM Lane V/C Ratio | - | - | 0.076 | 0.098 | - |
| HCM Control Delay (s) | - | - | 9.1 | 7.6 | - |
| HCM Lane LOS | - | - | A | A | - |
| HCM 95th %tile Q(veh) | - | - | 0.2 | 0.3 | - |

| Intersection | |
|---|---|
| Int Delay, s/veh | 2.3 |

| Movement | EBL | EBT | WBT | WBR | SBL | SBR |
|---|---|---|---|---|---|---|
| Vol, veh/h | 33 | 153 | 175 | 23 | 14 | 59 |
| Conflicting Peds, #/hr | 0 | 0 | 0 | 0 | 0 | 0 |
| Sign Control | Free | Free | Free | Free | Stop | Stop |
| RT Channelized | - | None | - | None | - | None |
| Storage Length | - | - | - | - | 0 | 0 |
| Veh in Median Storage, # | - | 0 | 0 | - | 0 | - |
| Grade, % | - | 0 | 0 | - | 0 | - |
| Peak Hour Factor | 87 | 87 | 89 | 89 | 80 | 80 |
| Heavy Vehicles, % | 2 | 2 | 2 | 2 | 2 | 2 |
| Mvmt Flow | 38 | 176 | 197 | 26 | 18 | 74 |

| Major/Minor | Major1 | | Major2 | | Minor2 | |
|---|---|---|---|---|---|---|
| Conflicting Flow All | 222 | 0 | - | 0 | 462 | 210 |
| Stage 1 | - | - | - | - | 210 | - |
| Stage 2 | - | - | - | - | 252 | - |
| Critical Hdwy | 4.12 | - | - | - | 6.42 | 6.22 |
| Critical Hdwy Stg 1 | - | - | - | - | 5.42 | - |
| Critical Hdwy Stg 2 | - | - | - | - | 5.42 | - |
| Follow-up Hdwy | 2.218 | - | - | - | 3.518 | 3.318 |
| Pot Cap-1 Maneuver | 1347 | - | - | - | 558 | 830 |
| Stage 1 | - | - | - | - | 825 | - |
| Stage 2 | - | - | - | - | 790 | - |
| Platoon blocked, % | | - | - | - | | |
| Mov Cap-1 Maneuver | 1347 | - | - | - | 541 | 830 |
| Mov Cap-2 Maneuver | - | - | - | - | 541 | - |
| Stage 1 | - | - | - | - | 825 | - |
| Stage 2 | - | - | - | - | 766 | - |

| Approach | EB | WB | SB |
|---|---|---|---|
| HCM Control Delay, s | 1.4 | 0 | 10.2 |
| HCM LOS | | | B |

| Minor Lane/Major Mvmt | EBL | EBT | WBT | WBR | SBLn1 | SBLn2 |
|---|---|---|---|---|---|---|
| Capacity (veh/h) | 1347 | - | - | - | 541 | 830 |
| HCM Lane V/C Ratio | 0.028 | - | - | - | 0.032 | 0.089 |
| HCM Control Delay (s) | 7.8 | 0 | - | - | 11.9 | 9.8 |
| HCM Lane LOS | A | A | - | - | B | A |
| HCM 95th %tile Q(veh) | 0.1 | - | - | - | 0.1 | 0.3 |

| Intersection | |
|---|---|
| Int Delay, s/veh | 1.3 |

| Movement | EBL | EBT | WBT | WBR | SBL | SBR |
|---|---|---|---|---|---|---|
| Vol, veh/h | 16 | 149 | 198 | 50 | 20 | 9 |
| Conflicting Peds, #/hr | 0 | 0 | 0 | 0 | 0 | 0 |
| Sign Control | Free | Free | Free | Free | Stop | Stop |
| RT Channelized | - | None | - | None | - | None |
| Storage Length | 0 | - | - | - | 0 | - |
| Veh in Median Storage, # | - | 0 | 0 | - | 0 | - |
| Grade, % | - | 0 | 0 | - | 0 | - |
| Peak Hour Factor | 90 | 90 | 92 | 92 | 64 | 64 |
| Heavy Vehicles, % | 2 | 2 | 2 | 2 | 2 | 2 |
| Mvmt Flow | 18 | 166 | 215 | 54 | 31 | 14 |

| Major/Minor | Major1 | | Major2 | | Minor2 | |
|---|---|---|---|---|---|---|
| Conflicting Flow All | 270 | 0 | - | 0 | 443 | 242 |
| Stage 1 | - | - | - | - | 242 | - |
| Stage 2 | - | - | - | - | 201 | - |
| Critical Hdwy | 4.12 | - | - | - | 6.42 | 6.22 |
| Critical Hdwy Stg 1 | - | - | - | - | 5.42 | - |
| Critical Hdwy Stg 2 | - | - | - | - | 5.42 | - |
| Follow-up Hdwy | 2.218 | - | - | - | 3.518 | 3.318 |
| Pot Cap-1 Maneuver | 1293 | - | - | - | 572 | 797 |
| Stage 1 | - | - | - | - | 798 | - |
| Stage 2 | - | - | - | - | 833 | - |
| Platoon blocked, % | | - | - | - | | |
| Mov Cap-1 Maneuver | 1293 | - | - | - | 564 | 797 |
| Mov Cap-2 Maneuver | - | - | - | - | 564 | - |
| Stage 1 | - | - | - | - | 798 | - |
| Stage 2 | - | - | - | - | 821 | - |

| Approach | EB | WB | SB |
|---|---|---|---|
| HCM Control Delay, s | 0.8 | 0 | 11.3 |
| HCM LOS | | | B |

| Minor Lane/Major Mvmt | EBL | EBT | WBT | WBR | SBLn1 |
|---|---|---|---|---|---|
| Capacity (veh/h) | 1293 | - | - | - | 620 |
| HCM Lane V/C Ratio | 0.014 | - | - | - | 0.073 |
| HCM Control Delay (s) | 7.8 | - | - | - | 11.3 |
| HCM Lane LOS | A | - | - | - | B |
| HCM 95th %tile Q(veh) | 0 | - | - | - | 0.2 |

| Movement | EBL | EBT | EBR | WBL | WBT | WBR | NBL | NBT | NBR | SBL | SBT | SBR |
|---|---|---|---|---|---|---|---|---|---|---|---|---|
| Lane Configurations | | | | | | | | | | | | |
| Volume (veh/h) | 9 | 389 | 26 | 56 | 426 | 13 | 145 | 8 | 144 | 4 | 9 | 6 |
| Number | 5 | 2 | 12 | 1 | 6 | 16 | 3 | 8 | 18 | 7 | 4 | 14 |
| Initial Q (Qb), veh | 0 | 0 | 0 | 0 | 0 | 0 | 0 | 0 | 0 | 0 | 0 | 0 |
| Ped-Bike Adj(A_pbT) | 1.00 | | 1.00 | 1.00 | | 1.00 | 1.00 | | 1.00 | 1.00 | | 1.00 |
| Parking Bus, Adj | 1.00 | 1.00 | 1.00 | 1.00 | 1.00 | 1.00 | 1.00 | 1.00 | 1.00 | 1.00 | 1.00 | 1.00 |
| Adj Sat Flow, veh/h/ln | 1593 | 1593 | 1625 | 1593 | 1593 | 1625 | 1593 | 1593 | 1625 | 1593 | 1593 | 1625 |
| Adj Flow Rate, veh/h | 10 | 423 | 25 | 61 | 463 | 12 | 158 | 9 | 67 | 4 | 10 | 3 |
| Adj No. of Lanes | 1 | 1 | 0 | 1 | 1 | 0 | 1 | 1 | 0 | 1 | 1 | 0 |
| Peak Hour Factor | 0.92 | 0.92 | 0.92 | 0.92 | 0.92 | 0.92 | 0.92 | 0.92 | 0.92 | 0.92 | 0.92 | 0.92 |
| Percent Heavy Veh, % | 2 | 2 | 2 | 2 | 2 | 2 | 2 | 2 | 2 | 2 | 2 | 2 |
| Cap, veh/h | 626 | 1043 | 62 | 648 | 1083 | 28 | 308 | 25 | 187 | 241 | 181 | 54 |
| Arrive On Green | 0.70 | 0.70 | 0.70 | 0.70 | 0.70 | 0.70 | 0.15 | 0.15 | 0.15 | 0.15 | 0.15 | 0.15 |
| Sat Flow, veh/h | 915 | 1490 | 88 | 938 | 1546 | 40 | 1395 | 163 | 1215 | 1318 | 1178 | 353 |
| Grp Volume(v), veh/h | 10 | 0 | 448 | 61 | 0 | 475 | 158 | 0 | 76 | 4 | 0 | 13 |
| Grp Sat Flow(s),veh/h/ln | 915 | 0 | 1578 | 938 | 0 | 1586 | 1395 | 0 | 1379 | 1318 | 0 | 1531 |
| Q Serve(g_s), s | 0.3 | 0.0 | 8.3 | 2.0 | 0.0 | 9.0 | 7.6 | 0.0 | 3.5 | 0.2 | 0.0 | 0.5 |
| Cycle Q Clear(g_c), s | 9.3 | 0.0 | 8.3 | 10.4 | 0.0 | 9.0 | 8.1 | 0.0 | 3.5 | 3.6 | 0.0 | 0.5 |
| Prop In Lane | 1.00 | | 0.06 | 1.00 | | 0.03 | 1.00 | | 0.88 | 1.00 | | 0.23 |
| Lane Grp Cap(c), veh/h | 626 | 0 | 1105 | 648 | 0 | 1111 | 308 | 0 | 212 | 241 | 0 | 236 |
| V/C Ratio(X) | 0.02 | 0.00 | 0.41 | 0.09 | 0.00 | 0.43 | 0.51 | 0.00 | 0.36 | 0.02 | 0.00 | 0.06 |
| Avail Cap(c_a), veh/h | 626 | 0 | 1105 | 648 | 0 | 1111 | 531 | 0 | 433 | 452 | 0 | 481 |
| HCM Platoon Ratio | 1.00 | 1.00 | 1.00 | 1.00 | 1.00 | 1.00 | 1.00 | 1.00 | 1.00 | 1.00 | 1.00 | 1.00 |
| Upstream Filter(I) | 1.00 | 0.00 | 1.00 | 1.00 | 0.00 | 1.00 | 1.00 | 0.00 | 1.00 | 1.00 | 0.00 | 1.00 |
| Uniform Delay (d), s/veh | 6.5 | 0.0 | 4.4 | 6.6 | 0.0 | 4.5 | 28.7 | 0.0 | 26.5 | 28.1 | 0.0 | 25.3 |
| Incr Delay (d2), s/veh | 0.0 | 0.0 | 1.1 | 0.3 | 0.0 | 1.2 | 1.3 | 0.0 | 1.0 | 0.0 | 0.0 | 0.1 |
| Initial Q Delay(d3),s/veh | 0.0 | 0.0 | 0.0 | 0.0 | 0.0 | 0.0 | 0.0 | 0.0 | 0.0 | 0.0 | 0.0 | 0.0 |
| %ile BackOfQ(50%),veh/ln | 0.1 | 0.0 | 3.8 | 0.6 | 0.0 | 4.2 | 3.1 | 0.0 | 1.4 | 0.1 | 0.0 | 0.2 |
| LnGrp Delay(d),s/veh | 6.5 | 0.0 | 5.5 | 6.9 | 0.0 | 5.7 | 30.1 | 0.0 | 27.5 | 28.2 | 0.0 | 25.4 |
| LnGrp LOS | A | | A | A | | A | C | | C | C | | C |
| Approach Vol, veh/h | | 458 | | | 536 | | | 234 | | | 17 | |
| Approach Delay, s/veh | | 5.5 | | | 5.8 | | | 29.2 | | | 26.0 | |
| Approach LOS | | A | | | A | | | C | | | C | |

| Timer | 1 | 2 | 3 | 4 | 5 | 6 | 7 | 8 |
|---|---|---|---|---|---|---|---|---|
| Assigned Phs | | 2 | | 4 | | 6 | | 8 |
| Phs Duration (G+Y+Rc), s | | 54.2 | | 15.8 | | 54.2 | | 15.8 |
| Change Period (Y+Rc), s | | * 5.2 | | 5.0 | | * 5.2 | | 5.0 |
| Max Green Setting (Gmax), s | | * 38 | | 22.0 | | * 38 | | 22.0 |
| Max Q Clear Time (g_c+I1), s | | 11.3 | | 5.6 | | 12.4 | | 10.1 |
| Green Ext Time (p_c), s | | 7.1 | | 0.9 | | 7.0 | | 0.7 |

| Intersection Summary | |
|---|---|
| HCM 2010 Ctrl Delay | 10.4 |
| HCM 2010 LOS | B |

Notes

* HCM 2010 computational engine requires equal clearance times for the phases crossing the barrier.

| Intersection | |
|---|---|
| Int Delay, s/veh | 0.2 |

| Movement | EBT | EBR | WBL | WBT | NBL | NBR |
|---|---|---|---|---|---|---|
| Vol, veh/h | 452 | 7 | 4 | 471 | 3 | 6 |
| Conflicting Peds, #/hr | 0 | 0 | 0 | 0 | 0 | 0 |
| Sign Control | Free | Free | Free | Free | Stop | Stop |
| RT Channelized | - | None | - | None | - | None |
| Storage Length | - | - | 0 | - | 0 | - |
| Veh in Median Storage, # | 0 | - | - | 0 | 0 | - |
| Grade, % | 0 | - | - | 0 | 0 | - |
| Peak Hour Factor | 92 | 92 | 92 | 92 | 92 | 92 |
| Heavy Vehicles, % | 2 | 2 | 2 | 2 | 2 | 2 |
| Mvmt Flow | 491 | 8 | 4 | 512 | 3 | 7 |

| Major/Minor | Major1 | | Major2 | | Minor1 | |
|---|---|---|---|---|---|---|
| Conflicting Flow All | 0 | 0 | 499 | 0 | 1016 | 495 |
| Stage 1 | - | - | - | - | 495 | - |
| Stage 2 | - | - | - | - | 521 | - |
| Critical Hdwy | - | - | 4.12 | - | 6.42 | 6.22 |
| Critical Hdwy Stg 1 | - | - | - | - | 5.42 | - |
| Critical Hdwy Stg 2 | - | - | - | - | 5.42 | - |
| Follow-up Hdwy | - | - | 2.218 | - | 3.518 | 3.318 |
| Pot Cap-1 Maneuver | - | - | 1065 | - | 264 | 575 |
| Stage 1 | - | - | - | - | 613 | - |
| Stage 2 | - | - | - | - | 596 | - |
| Platoon blocked, % | - | - | | - | | |
| Mov Cap-1 Maneuver | - | - | 1065 | - | 263 | 575 |
| Mov Cap-2 Maneuver | - | - | - | - | 263 | - |
| Stage 1 | - | - | - | - | 613 | - |
| Stage 2 | - | - | - | - | 594 | - |

| Approach | EB | WB | NB |
|---|---|---|---|
| HCM Control Delay, s | 0 | 0.1 | 14 |
| HCM LOS | | | B |

| Minor Lane/Major Mvmt | NBLn1 | EBT | EBR | WBL | WBT |
|---|---|---|---|---|---|
| Capacity (veh/h) | 412 | - | - | 1065 | - |
| HCM Lane V/C Ratio | 0.024 | - | - | 0.004 | - |
| HCM Control Delay (s) | 14 | - | - | 8.4 | - |
| HCM Lane LOS | B | - | - | A | - |
| HCM 95th %tile Q(veh) | 0.1 | - | - | 0 | - |

| Intersection | |
|---|---|
| Int Delay, s/veh | 3.4 |

| Movement | WBL | WBR | NBT | NBR | SBL | SBT |
|---|---|---|---|---|---|---|
| Vol, veh/h | 3 | 71 | 91 | 3 | 15 | 49 |
| Conflicting Peds, #/hr | 0 | 0 | 0 | 0 | 0 | 0 |
| Sign Control | Stop | Stop | Free | Free | Free | Free |
| RT Channelized | - | None | - | None | - | None |
| Storage Length | 0 | - | - | - | 50 | - |
| Veh in Median Storage, # | 0 | - | 0 | - | - | 0 |
| Grade, % | 0 | - | 0 | - | - | 0 |
| Peak Hour Factor | 92 | 92 | 92 | 92 | 92 | 92 |
| Heavy Vehicles, % | 2 | 2 | 2 | 2 | 2 | 2 |
| Mvmt Flow | 3 | 77 | 99 | 3 | 16 | 53 |

| Major/Minor | Minor1 | | Major1 | | Major2 | |
|---|---|---|---|---|---|---|
| Conflicting Flow All | 187 | 101 | 0 | 0 | 102 | 0 |
| Stage 1 | 101 | - | - | - | - | - |
| Stage 2 | 86 | - | - | - | - | - |
| Critical Hdwy | 6.42 | 6.22 | - | - | 4.12 | - |
| Critical Hdwy Stg 1 | 5.42 | - | - | - | - | - |
| Critical Hdwy Stg 2 | 5.42 | - | - | - | - | - |
| Follow-up Hdwy | 3.518 | 3.318 | - | - | 2.218 | - |
| Pot Cap-1 Maneuver | 802 | 954 | - | - | 1490 | - |
| Stage 1 | 923 | - | - | - | - | - |
| Stage 2 | 937 | - | - | - | - | - |
| Platoon blocked, % | | | - | - | | - |
| Mov Cap-1 Maneuver | 793 | 954 | - | - | 1490 | - |
| Mov Cap-2 Maneuver | 793 | - | - | - | - | - |
| Stage 1 | 923 | - | - | - | - | - |
| Stage 2 | 927 | - | - | - | - | - |

| Approach | WB | NB | SB |
|---|---|---|---|
| HCM Control Delay, s | 9.2 | 0 | 1.7 |
| HCM LOS | A | | |

| Minor Lane/Major Mvmt | NBT | NBR | WBLn1 | SBL | SBT |
|---|---|---|---|---|---|
| Capacity (veh/h) | - | - | 946 | 1490 | - |
| HCM Lane V/C Ratio | - | - | 0.085 | 0.011 | - |
| HCM Control Delay (s) | - | - | 9.2 | 7.4 | - |
| HCM Lane LOS | - | - | A | A | - |
| HCM 95th %tile Q(veh) | - | - | 0.3 | 0 | - |

| Intersection | |
|---|---|
| Int Delay, s/veh | 2 |

| Movement | EBL | EBT | WBT | WBR | SBL | SBR |
|---|---|---|---|---|---|---|
| Vol, veh/h | 78 | 251 | 202 | 21 | 13 | 39 |
| Conflicting Peds, #/hr | 0 | 0 | 0 | 0 | 0 | 0 |
| Sign Control | Free | Free | Free | Free | Stop | Stop |
| RT Channelized | - | None | - | None | - | None |
| Storage Length | - | - | - | - | 0 | 0 |
| Veh in Median Storage, # | - | 0 | 0 | - | 0 | - |
| Grade, % | - | 0 | 0 | - | 0 | - |
| Peak Hour Factor | 92 | 92 | 92 | 92 | 92 | 92 |
| Heavy Vehicles, % | 2 | 2 | 2 | 2 | 2 | 2 |
| Mvmt Flow | 85 | 273 | 220 | 23 | 14 | 42 |

| Major/Minor | Major1 | | Major2 | | Minor2 | |
|---|---|---|---|---|---|---|
| Conflicting Flow All | 242 | 0 | - | 0 | 673 | 231 |
| Stage 1 | - | - | - | - | 231 | - |
| Stage 2 | - | - | - | - | 442 | - |
| Critical Hdwy | 4.12 | - | - | - | 6.42 | 6.22 |
| Critical Hdwy Stg 1 | - | - | - | - | 5.42 | - |
| Critical Hdwy Stg 2 | - | - | - | - | 5.42 | - |
| Follow-up Hdwy | 2.218 | - | - | - | 3.518 | 3.318 |
| Pot Cap-1 Maneuver | 1324 | - | - | - | 421 | 808 |
| Stage 1 | - | - | - | - | 807 | - |
| Stage 2 | - | - | - | - | 648 | - |
| Platoon blocked, % | | - | - | - | | |
| Mov Cap-1 Maneuver | 1324 | - | - | - | 389 | 808 |
| Mov Cap-2 Maneuver | - | - | - | - | 389 | - |
| Stage 1 | - | - | - | - | 807 | - |
| Stage 2 | - | - | - | - | 599 | - |

| Approach | EB | WB | SB |
|---|---|---|---|
| HCM Control Delay, s | 1.9 | 0 | 10.9 |
| HCM LOS | | | B |

| Minor Lane/Major Mvmt | EBL | EBT | WBT | WBR | SBLn1 | SBLn2 |
|---|---|---|---|---|---|---|
| Capacity (veh/h) | 1324 | - | - | - | 389 | 808 |
| HCM Lane V/C Ratio | 0.064 | - | - | - | 0.036 | 0.052 |
| HCM Control Delay (s) | 7.9 | 0 | - | - | 14.6 | 9.7 |
| HCM Lane LOS | A | A | - | - | B | A |
| HCM 95th %tile Q(veh) | 0.2 | - | - | - | 0.1 | 0.2 |

| Intersection | |
|---|---|
| Int Delay, s/veh | 1.1 |

| Movement | EBL | EBT | WBT | WBR | SBL | SBR |
|---|---|---|---|---|---|---|
| Vol, veh/h | 3 | 275 | 194 | 8 | 34 | 14 |
| Conflicting Peds, #/hr | 0 | 0 | 0 | 0 | 0 | 0 |
| Sign Control | Free | Free | Free | Free | Stop | Stop |
| RT Channelized | - | None | - | None | - | None |
| Storage Length | 0 | - | - | - | 0 | - |
| Veh in Median Storage, # | - | 0 | 0 | - | 0 | - |
| Grade, % | - | 0 | 0 | - | 0 | - |
| Peak Hour Factor | 92 | 92 | 92 | 92 | 92 | 92 |
| Heavy Vehicles, % | 2 | 2 | 2 | 2 | 2 | 2 |
| Mvmt Flow | 3 | 299 | 211 | 9 | 37 | 15 |

| Major/Minor | Major1 | | Major2 | | Minor2 | |
|---|---|---|---|---|---|---|
| Conflicting Flow All | 220 | 0 | - | 0 | 520 | 215 |
| Stage 1 | - | - | - | - | 215 | - |
| Stage 2 | - | - | - | - | 305 | - |
| Critical Hdwy | 4.12 | - | - | - | 6.42 | 6.22 |
| Critical Hdwy Stg 1 | - | - | - | - | 5.42 | - |
| Critical Hdwy Stg 2 | - | - | - | - | 5.42 | - |
| Follow-up Hdwy | 2.218 | - | - | - | 3.518 | 3.318 |
| Pot Cap-1 Maneuver | 1349 | - | - | - | 516 | 825 |
| Stage 1 | - | - | - | - | 821 | - |
| Stage 2 | - | - | - | - | 748 | - |
| Platoon blocked, % | | - | - | - | | |
| Mov Cap-1 Maneuver | 1349 | - | - | - | 515 | 825 |
| Mov Cap-2 Maneuver | - | - | - | - | 515 | - |
| Stage 1 | - | - | - | - | 821 | - |
| Stage 2 | - | - | - | - | 746 | - |

| Approach | EB | WB | SB |
|---|---|---|---|
| HCM Control Delay, s | 0.1 | 0 | 11.8 |
| HCM LOS | | | B |

| Minor Lane/Major Mvmt | EBL | EBT | WBT | WBR | SBLn1 |
|---|---|---|---|---|---|
| Capacity (veh/h) | 1349 | - | - | - | 578 |
| HCM Lane V/C Ratio | 0.002 | - | - | - | 0.09 |
| HCM Control Delay (s) | 7.7 | - | - | - | 11.8 |
| HCM Lane LOS | A | - | - | - | B |
| HCM 95th %tile Q(veh) | 0 | - | - | - | 0.3 |

| Movement | EBL | EBT | EBR | WBL | WBT | WBR | NBL | NBT | NBR | SBL | SBT | SBR |
|---|---|---|---|---|---|---|---|---|---|---|---|---|
| Lane Configurations | | | | | | | | | | | | |
| Volume (veh/h) | 4 | 571 | 104 | 180 | 377 | 12 | 69 | 10 | 88 | 5 | 13 | 6 |
| Number | 5 | 2 | 12 | 1 | 6 | 16 | 3 | 8 | 18 | 7 | 4 | 14 |
| Initial Q (Qb), veh | 0 | 0 | 0 | 0 | 0 | 0 | 0 | 0 | 0 | 0 | 0 | 0 |
| Ped-Bike Adj(A_pbT) | 1.00 | | 1.00 | 1.00 | | 1.00 | 1.00 | | 1.00 | 1.00 | | 1.00 |
| Parking Bus, Adj | 1.00 | 1.00 | 1.00 | 1.00 | 1.00 | 1.00 | 1.00 | 1.00 | 1.00 | 1.00 | 1.00 | 1.00 |
| Adj Sat Flow, veh/h/ln | 1593 | 1593 | 1625 | 1593 | 1593 | 1625 | 1593 | 1593 | 1625 | 1593 | 1593 | 1625 |
| Adj Flow Rate, veh/h | 4 | 621 | 104 | 196 | 410 | 11 | 75 | 11 | 48 | 5 | 14 | 3 |
| Adj No. of Lanes | 1 | 1 | 0 | 1 | 1 | 0 | 1 | 1 | 0 | 1 | 1 | 0 |
| Peak Hour Factor | 0.92 | 0.92 | 0.92 | 0.92 | 0.92 | 0.92 | 0.92 | 0.92 | 0.92 | 0.92 | 0.92 | 0.92 |
| Percent Heavy Veh, % | 2 | 2 | 2 | 2 | 2 | 2 | 2 | 2 | 2 | 2 | 2 | 2 |
| Cap, veh/h | 749 | 1010 | 169 | 501 | 1172 | 31 | 221 | 25 | 108 | 177 | 121 | 26 |
| Arrive On Green | 0.76 | 0.76 | 0.76 | 0.76 | 0.76 | 0.76 | 0.10 | 0.10 | 0.10 | 0.10 | 0.10 | 0.10 |
| Sat Flow, veh/h | 962 | 1331 | 223 | 726 | 1544 | 41 | 1390 | 260 | 1133 | 1338 | 1272 | 273 |
| Grp Volume(v), veh/h | 4 | 0 | 725 | 196 | 0 | 421 | 75 | 0 | 59 | 5 | 0 | 17 |
| Grp Sat Flow(s),veh/h/ln | 962 | 0 | 1554 | 726 | 0 | 1586 | 1390 | 0 | 1393 | 1338 | 0 | 1545 |
| Q Serve(g_s), s | 0.1 | 0.0 | 14.8 | 11.7 | 0.0 | 6.1 | 3.7 | 0.0 | 2.8 | 0.2 | 0.0 | 0.7 |
| Cycle Q Clear(g_c), s | 6.2 | 0.0 | 14.8 | 26.4 | 0.0 | 6.1 | 4.4 | 0.0 | 2.8 | 3.0 | 0.0 | 0.7 |
| Prop In Lane | 1.00 | | 0.14 | 1.00 | | 0.03 | 1.00 | | 0.81 | 1.00 | | 0.18 |
| Lane Grp Cap(c), veh/h | 749 | 0 | 1179 | 501 | 0 | 1204 | 221 | 0 | 133 | 177 | 0 | 147 |
| V/C Ratio(X) | 0.01 | 0.00 | 0.61 | 0.39 | 0.00 | 0.35 | 0.34 | 0.00 | 0.44 | 0.03 | 0.00 | 0.12 |
| Avail Cap(c_a), veh/h | 749 | 0 | 1179 | 501 | 0 | 1204 | 466 | 0 | 378 | 413 | 0 | 419 |
| HCM Platoon Ratio | 1.00 | 1.00 | 1.00 | 1.00 | 1.00 | 1.00 | 1.00 | 1.00 | 1.00 | 1.00 | 1.00 | 1.00 |
| Upstream Filter(I) | 1.00 | 0.00 | 1.00 | 1.00 | 0.00 | 1.00 | 1.00 | 0.00 | 1.00 | 1.00 | 0.00 | 1.00 |
| Uniform Delay (d), s/veh | 3.8 | 0.0 | 3.8 | 9.8 | 0.0 | 2.8 | 31.0 | 0.0 | 29.9 | 31.4 | 0.0 | 29.0 |
| Incr Delay (d2), s/veh | 0.0 | 0.0 | 2.4 | 2.3 | 0.0 | 0.8 | 0.9 | 0.0 | 2.3 | 0.1 | 0.0 | 0.3 |
| Initial Q Delay(d3),s/veh | 0.0 | 0.0 | 0.0 | 0.0 | 0.0 | 0.0 | 0.0 | 0.0 | 0.0 | 0.0 | 0.0 | 0.0 |
| %ile BackOfQ(50%),veh/ln | 0.0 | 0.0 | 6.8 | 2.7 | 0.0 | 2.8 | 1.5 | 0.0 | 1.2 | 0.1 | 0.0 | 0.3 |
| LnGrp Delay(d),s/veh | 3.8 | 0.0 | 6.2 | 12.1 | 0.0 | 3.6 | 31.9 | 0.0 | 32.3 | 31.4 | 0.0 | 29.3 |
| LnGrp LOS | A | | A | B | | A | C | | C | C | | C |
| Approach Vol, veh/h | | 729 | | | 617 | | | 134 | | | 22 | |
| Approach Delay, s/veh | | 6.2 | | | 6.3 | | | 32.0 | | | 29.8 | |
| Approach LOS | | A | | | A | | | C | | | C | |

| Timer | 1 | 2 | 3 | 4 | 5 | 6 | 7 | 8 |
|---|---|---|---|---|---|---|---|---|
| Assigned Phs | | 2 | | 4 | | 6 | | 8 |
| Phs Duration (G+Y+Rc), s | | 58.3 | | 11.7 | | 58.3 | | 11.7 |
| Change Period (Y+Rc), s | | * 5.2 | | 5.0 | | * 5.2 | | 5.0 |
| Max Green Setting (Gmax), s | | * 41 | | 19.0 | | * 41 | | 19.0 |
| Max Q Clear Time (g_c+I1), s | | 16.8 | | 5.0 | | 28.4 | | 6.4 |
| Green Ext Time (p_c), s | | 10.8 | | 0.5 | | 7.2 | | 0.5 |

| Intersection Summary | |
|---|---|
| HCM 2010 Ctrl Delay | 8.9 |
| HCM 2010 LOS | A |

Notes

* HCM 2010 computational engine requires equal clearance times for the phases crossing the barrier.

| Intersection | |
|---|---|
| Int Delay, s/veh | 0.1 |

| Movement | EBT | EBR | WBL | WBT | NBL | NBR |
|---|---|---|---|---|---|---|
| Vol, veh/h | 622 | 5 | 4 | 504 | 2 | 5 |
| Conflicting Peds, #/hr | 0 | 0 | 0 | 0 | 0 | 0 |
| Sign Control | Free | Free | Free | Free | Stop | Stop |
| RT Channelized | - | None | - | None | - | None |
| Storage Length | - | - | 0 | - | 0 | - |
| Veh in Median Storage, # | 0 | - | - | 0 | 0 | - |
| Grade, % | 0 | - | - | 0 | 0 | - |
| Peak Hour Factor | 92 | 92 | 92 | 92 | 92 | 92 |
| Heavy Vehicles, % | 2 | 2 | 2 | 2 | 2 | 2 |
| Mvmt Flow | 676 | 5 | 4 | 548 | 2 | 5 |

| Major/Minor | Major1 | | Major2 | | Minor1 | |
|---|---|---|---|---|---|---|
| Conflicting Flow All | 0 | 0 | 682 | 0 | 1236 | 679 |
| Stage 1 | - | - | - | - | 679 | - |
| Stage 2 | - | - | - | - | 557 | - |
| Critical Hdwy | - | - | 4.12 | - | 6.42 | 6.22 |
| Critical Hdwy Stg 1 | - | - | - | - | 5.42 | - |
| Critical Hdwy Stg 2 | - | - | - | - | 5.42 | - |
| Follow-up Hdwy | - | - | 2.218 | - | 3.518 | 3.318 |
| Pot Cap-1 Maneuver | - | - | 911 | - | 195 | 452 |
| Stage 1 | - | - | - | - | 504 | - |
| Stage 2 | - | - | - | - | 574 | - |
| Platoon blocked, % | - | - | | - | | |
| Mov Cap-1 Maneuver | - | - | 911 | - | 194 | 452 |
| Mov Cap-2 Maneuver | - | - | - | - | 194 | - |
| Stage 1 | - | - | - | - | 504 | - |
| Stage 2 | - | - | - | - | 571 | - |

| Approach | EB | WB | NB |
|---|---|---|---|
| HCM Control Delay, s | 0 | 0.1 | 16.2 |
| HCM LOS | | | C |

| Minor Lane/Major Mvmt | NBLn1 | EBT | EBR | WBL | WBT |
|---|---|---|---|---|---|
| Capacity (veh/h) | 328 | - | - | 911 | - |
| HCM Lane V/C Ratio | 0.023 | - | - | 0.005 | - |
| HCM Control Delay (s) | 16.2 | - | - | 9 | - |
| HCM Lane LOS | C | - | - | A | - |
| HCM 95th %tile Q(veh) | 0.1 | - | - | 0 | - |

| Intersection | |
|---|---|
| Int Delay, s/veh | 2.5 |

| Movement | WBL | WBR | NBT | NBR | SBL | SBT |
|---|---|---|---|---|---|---|
| Vol, veh/h | 1 | 21 | 75 | 5 | 67 | 104 |
| Conflicting Peds, #/hr | 0 | 0 | 0 | 0 | 0 | 0 |
| Sign Control | Stop | Stop | Free | Free | Free | Free |
| RT Channelized | - | None | - | None | - | None |
| Storage Length | 0 | - | - | - | 50 | - |
| Veh in Median Storage, # | 0 | - | 0 | - | - | 0 |
| Grade, % | 0 | - | 0 | - | - | 0 |
| Peak Hour Factor | 92 | 92 | 92 | 92 | 92 | 92 |
| Heavy Vehicles, % | 2 | 2 | 2 | 2 | 2 | 2 |
| Mvmt Flow | 1 | 23 | 82 | 5 | 73 | 113 |

| Major/Minor | Minor1 | | Major1 | | Major2 | |
|---|---|---|---|---|---|---|
| Conflicting Flow All | 343 | 84 | 0 | 0 | 87 | 0 |
| Stage 1 | 84 | - | - | - | - | - |
| Stage 2 | 259 | - | - | - | - | - |
| Critical Hdwy | 6.42 | 6.22 | - | - | 4.12 | - |
| Critical Hdwy Stg 1 | 5.42 | - | - | - | - | - |
| Critical Hdwy Stg 2 | 5.42 | - | - | - | - | - |
| Follow-up Hdwy | 3.518 | 3.318 | - | - | 2.218 | - |
| Pot Cap-1 Maneuver | 653 | 975 | - | - | 1509 | - |
| Stage 1 | 939 | - | - | - | - | - |
| Stage 2 | 784 | - | - | - | - | - |
| Platoon blocked, % | | | - | - | | - |
| Mov Cap-1 Maneuver | 621 | 975 | - | - | 1509 | - |
| Mov Cap-2 Maneuver | 621 | - | - | - | - | - |
| Stage 1 | 939 | - | - | - | - | - |
| Stage 2 | 746 | - | - | - | - | - |

| Approach | WB | NB | SB |
|---|---|---|---|
| HCM Control Delay, s | 8.9 | 0 | 2.9 |
| HCM LOS | A | | |

| Minor Lane/Major Mvmt | NBT | NBR | WBLn1 | SBL | SBT |
|---|---|---|---|---|---|
| Capacity (veh/h) | - | - | 950 | 1509 | - |
| HCM Lane V/C Ratio | - | - | 0.025 | 0.048 | - |
| HCM Control Delay (s) | - | - | 8.9 | 7.5 | - |
| HCM Lane LOS | - | - | A | A | - |
| HCM 95th %tile Q(veh) | - | - | 0.1 | 0.2 | - |

| Intersection | |
|---|---|
| Int Delay, s/veh | 2.2 |

| Movement | EBL | EBT | WBT | WBR | SBL | SBR |
|---|---|---|---|---|---|---|
| Vol, veh/h | 36 | 189 | 219 | 30 | 18 | 73 |
| Conflicting Peds, #/hr | 0 | 0 | 0 | 0 | 0 | 0 |
| Sign Control | Free | Free | Free | Free | Stop | Stop |
| RT Channelized | - | None | - | None | - | None |
| Storage Length | - | - | - | - | 0 | 0 |
| Veh in Median Storage, # | - | 0 | 0 | - | 0 | - |
| Grade, % | - | 0 | 0 | - | 0 | - |
| Peak Hour Factor | 92 | 92 | 92 | 92 | 92 | 92 |
| Heavy Vehicles, % | 2 | 2 | 2 | 2 | 2 | 2 |
| Mvmt Flow | 39 | 205 | 238 | 33 | 20 | 79 |

| Major/Minor | Major1 | | Major2 | | Minor2 | |
|---|---|---|---|---|---|---|
| Conflicting Flow All | 271 | 0 | - | 0 | 538 | 254 |
| Stage 1 | - | - | - | - | 254 | - |
| Stage 2 | - | - | - | - | 284 | - |
| Critical Hdwy | 4.12 | - | - | - | 6.42 | 6.22 |
| Critical Hdwy Stg 1 | - | - | - | - | 5.42 | - |
| Critical Hdwy Stg 2 | - | - | - | - | 5.42 | - |
| Follow-up Hdwy | 2.218 | - | - | - | 3.518 | 3.318 |
| Pot Cap-1 Maneuver | 1292 | - | - | - | 504 | 785 |
| Stage 1 | - | - | - | - | 788 | - |
| Stage 2 | - | - | - | - | 764 | - |
| Platoon blocked, % | | - | - | - | | |
| Mov Cap-1 Maneuver | 1292 | - | - | - | 487 | 785 |
| Mov Cap-2 Maneuver | - | - | - | - | 487 | - |
| Stage 1 | - | - | - | - | 788 | - |
| Stage 2 | - | - | - | - | 738 | - |

| Approach | EB | WB | SB |
|---|---|---|---|
| HCM Control Delay, s | 1.3 | 0 | 10.6 |
| HCM LOS | | | B |

| Minor Lane/Major Mvmt | EBL | EBT | WBT | WBR | SBLn1 | SBLn2 |
|---|---|---|---|---|---|---|
| Capacity (veh/h) | 1292 | - | - | - | 487 | 785 |
| HCM Lane V/C Ratio | 0.03 | - | - | - | 0.04 | 0.101 |
| HCM Control Delay (s) | 7.9 | 0 | - | - | 12.7 | 10.1 |
| HCM Lane LOS | A | A | - | - | B | B |
| HCM 95th %tile Q(veh) | 0.1 | - | - | - | 0.1 | 0.3 |

| Intersection | |
|---|---|
| Int Delay, s/veh | 0.7 |

| Movement | EBL | EBT | WBT | WBR | SBL | SBR |
|---|---|---|---|---|---|---|
| Vol, veh/h | 12 | 189 | 251 | 42 | 16 | 7 |
| Conflicting Peds, #/hr | 0 | 0 | 0 | 0 | 0 | 0 |
| Sign Control | Free | Free | Free | Free | Stop | Stop |
| RT Channelized | - | None | - | None | - | None |
| Storage Length | 0 | - | - | - | 0 | - |
| Veh in Median Storage, # | - | 0 | 0 | - | 0 | - |
| Grade, % | - | 0 | 0 | - | 0 | - |
| Peak Hour Factor | 92 | 92 | 92 | 92 | 92 | 92 |
| Heavy Vehicles, % | 2 | 2 | 2 | 2 | 2 | 2 |
| Mvmt Flow | 13 | 205 | 273 | 46 | 17 | 8 |

| Major/Minor | Major1 | | Major2 | | Minor2 | |
|---|---|---|---|---|---|---|
| Conflicting Flow All | 318 | 0 | - | 0 | 528 | 296 |
| Stage 1 | - | - | - | - | 296 | - |
| Stage 2 | - | - | - | - | 232 | - |
| Critical Hdwy | 4.12 | - | - | - | 6.42 | 6.22 |
| Critical Hdwy Stg 1 | - | - | - | - | 5.42 | - |
| Critical Hdwy Stg 2 | - | - | - | - | 5.42 | - |
| Follow-up Hdwy | 2.218 | - | - | - | 3.518 | 3.318 |
| Pot Cap-1 Maneuver | 1242 | - | - | - | 511 | 743 |
| Stage 1 | - | - | - | - | 755 | - |
| Stage 2 | - | - | - | - | 807 | - |
| Platoon blocked, % | | - | - | - | | |
| Mov Cap-1 Maneuver | 1242 | - | - | - | 506 | 743 |
| Mov Cap-2 Maneuver | - | - | - | - | 506 | - |
| Stage 1 | - | - | - | - | 755 | - |
| Stage 2 | - | - | - | - | 799 | - |

| Approach | EB | WB | SB |
|---|---|---|---|
| HCM Control Delay, s | 0.5 | 0 | 11.7 |
| HCM LOS | | | B |

| Minor Lane/Major Mvmt | EBL | EBT | WBT | WBR | SBLn1 |
|---|---|---|---|---|---|
| Capacity (veh/h) | 1242 | - | - | - | 560 |
| HCM Lane V/C Ratio | 0.011 | - | - | - | 0.045 |
| HCM Control Delay (s) | 7.9 | - | - | - | 11.7 |
| HCM Lane LOS | A | - | - | - | B |
| HCM 95th %tile Q(veh) | 0 | - | - | - | 0.1 |

| Movement | EBL | EBT | EBR | WBL | WBT | WBR | NBL | NBT | NBR | SBL | SBT | SBR |
|---|---|---|---|---|---|---|---|---|---|---|---|---|
| Lane Configurations | | | | | | | | | | | | |
| Volume (veh/h) | 9 | 389 | 30 | 49 | 426 | 13 | 161 | 11 | 116 | 4 | 10 | 6 |
| Number | 5 | 2 | 12 | 1 | 6 | 16 | 3 | 8 | 18 | 7 | 4 | 14 |
| Initial Q (Qb), veh | 0 | 0 | 0 | 0 | 0 | 0 | 0 | 0 | 0 | 0 | 0 | 0 |
| Ped-Bike Adj(A_pbT) | 1.00 | | 1.00 | 1.00 | | 1.00 | 1.00 | | 1.00 | 1.00 | | 1.00 |
| Parking Bus, Adj | 1.00 | 1.00 | 1.00 | 1.00 | 1.00 | 1.00 | 1.00 | 1.00 | 1.00 | 1.00 | 1.00 | 1.00 |
| Adj Sat Flow, veh/h/ln | 1593 | 1593 | 1625 | 1593 | 1593 | 1625 | 1593 | 1593 | 1625 | 1593 | 1593 | 1625 |
| Adj Flow Rate, veh/h | 10 | 423 | 30 | 53 | 463 | 12 | 175 | 12 | 36 | 4 | 11 | 3 |
| Adj No. of Lanes | 1 | 1 | 0 | 1 | 1 | 0 | 1 | 1 | 0 | 1 | 1 | 0 |
| Peak Hour Factor | 0.92 | 0.92 | 0.92 | 0.92 | 0.92 | 0.92 | 0.92 | 0.92 | 0.92 | 0.92 | 0.92 | 0.92 |
| Percent Heavy Veh, % | 2 | 2 | 2 | 2 | 2 | 2 | 2 | 2 | 2 | 2 | 2 | 2 |
| Cap, veh/h | 613 | 1014 | 72 | 630 | 1066 | 28 | 322 | 58 | 174 | 285 | 199 | 54 |
| Arrive On Green | 0.69 | 0.69 | 0.69 | 0.69 | 0.69 | 0.69 | 0.16 | 0.16 | 0.16 | 0.16 | 0.16 | 0.16 |
| Sat Flow, veh/h | 915 | 1470 | 104 | 934 | 1546 | 40 | 1394 | 352 | 1055 | 1352 | 1206 | 329 |
| Grp Volume(v), veh/h | 10 | 0 | 453 | 53 | 0 | 475 | 175 | 0 | 48 | 4 | 0 | 14 |
| Grp Sat Flow(s),veh/h/ln | 915 | 0 | 1575 | 934 | 0 | 1586 | 1394 | 0 | 1407 | 1352 | 0 | 1535 |
| Q Serve(g_s), s | 0.3 | 0.0 | 8.8 | 1.8 | 0.0 | 9.3 | 8.5 | 0.0 | 2.1 | 0.2 | 0.0 | 0.5 |
| Cycle Q Clear(g_c), s | 9.6 | 0.0 | 8.8 | 10.6 | 0.0 | 9.3 | 9.0 | 0.0 | 2.1 | 2.2 | 0.0 | 0.5 |
| Prop In Lane | 1.00 | | 0.07 | 1.00 | | 0.03 | 1.00 | | 0.75 | 1.00 | | 0.21 |
| Lane Grp Cap(c), veh/h | 613 | 0 | 1086 | 630 | 0 | 1094 | 322 | 0 | 232 | 285 | 0 | 253 |
| V/C Ratio(X) | 0.02 | 0.00 | 0.42 | 0.08 | 0.00 | 0.43 | 0.54 | 0.00 | 0.21 | 0.01 | 0.00 | 0.06 |
| Avail Cap(c_a), veh/h | 613 | 0 | 1086 | 630 | 0 | 1094 | 530 | 0 | 442 | 488 | 0 | 482 |
| HCM Platoon Ratio | 1.00 | 1.00 | 1.00 | 1.00 | 1.00 | 1.00 | 1.00 | 1.00 | 1.00 | 1.00 | 1.00 | 1.00 |
| Upstream Filter(I) | 1.00 | 0.00 | 1.00 | 1.00 | 0.00 | 1.00 | 1.00 | 0.00 | 1.00 | 1.00 | 0.00 | 1.00 |
| Uniform Delay (d), s/veh | 6.9 | 0.0 | 4.7 | 7.0 | 0.0 | 4.8 | 28.5 | 0.0 | 25.3 | 26.3 | 0.0 | 24.7 |
| Incr Delay (d2), s/veh | 0.0 | 0.0 | 1.2 | 0.3 | 0.0 | 1.3 | 1.4 | 0.0 | 0.4 | 0.0 | 0.0 | 0.1 |
| Initial Q Delay(d3),s/veh | 0.0 | 0.0 | 0.0 | 0.0 | 0.0 | 0.0 | 0.0 | 0.0 | 0.0 | 0.0 | 0.0 | 0.0 |
| %ile BackOfQ(50%),veh/ln | 0.1 | 0.0 | 4.1 | 0.5 | 0.0 | 4.3 | 3.4 | 0.0 | 0.8 | 0.1 | 0.0 | 0.2 |
| LnGrp Delay(d),s/veh | 7.0 | 0.0 | 5.9 | 7.3 | 0.0 | 6.1 | 29.9 | 0.0 | 25.7 | 26.3 | 0.0 | 24.7 |
| LnGrp LOS | A | | A | A | | A | C | | C | C | | C |
| Approach Vol, veh/h | | 463 | | | 528 | | | 223 | | | 18 | |
| Approach Delay, s/veh | | 5.9 | | | 6.2 | | | 29.0 | | | 25.1 | |
| Approach LOS | | A | | | A | | | C | | | C | |

| Timer | 1 | 2 | 3 | 4 | 5 | 6 | 7 | 8 |
|---|---|---|---|---|---|---|---|---|
| Assigned Phs | | 2 | | 4 | | 6 | | 8 |
| Phs Duration (G+Y+Rc), s | | 53.5 | | 16.5 | | 53.5 | | 16.5 |
| Change Period (Y+Rc), s | | * 5.2 | | 5.0 | | * 5.2 | | 5.0 |
| Max Green Setting (Gmax), s | | * 38 | | 22.0 | | * 38 | | 22.0 |
| Max Q Clear Time (g_c+I1), s | | 11.6 | | 4.2 | | 12.6 | | 11.0 |
| Green Ext Time (p_c), s | | 7.1 | | 0.8 | | 7.0 | | 0.6 |

| Intersection Summary | |
|---|---|
| HCM 2010 Ctrl Delay | 10.5 |
| HCM 2010 LOS | B |

Notes

* HCM 2010 computational engine requires equal clearance times for the phases crossing the barrier.

| Intersection | |
|---|---|
| Int Delay, s/veh | 0.9 |

| Movement | EBT | EBR | WBL | WBT | NBL | NBR |
|---|---|---|---|---|---|---|
| Vol, veh/h | 424 | 7 | 20 | 464 | 3 | 53 |
| Conflicting Peds, #/hr | 0 | 0 | 0 | 0 | 0 | 0 |
| Sign Control | Free | Free | Free | Free | Stop | Stop |
| RT Channelized | - | None | - | None | - | None |
| Storage Length | - | - | 0 | - | 0 | - |
| Veh in Median Storage, # | 0 | - | - | 0 | 0 | - |
| Grade, % | 0 | - | - | 0 | 0 | - |
| Peak Hour Factor | 92 | 92 | 92 | 92 | 92 | 92 |
| Heavy Vehicles, % | 2 | 2 | 2 | 2 | 2 | 2 |
| Mvmt Flow | 461 | 8 | 22 | 504 | 3 | 58 |

| Major/Minor | Major1 | | Major2 | | Minor1 | |
|---|---|---|---|---|---|---|
| Conflicting Flow All | 0 | 0 | 468 | 0 | 1013 | 465 |
| Stage 1 | - | - | - | - | 465 | - |
| Stage 2 | - | - | - | - | 548 | - |
| Critical Hdwy | - | - | 4.12 | - | 6.42 | 6.22 |
| Critical Hdwy Stg 1 | - | - | - | - | 5.42 | - |
| Critical Hdwy Stg 2 | - | - | - | - | 5.42 | - |
| Follow-up Hdwy | - | - | 2.218 | - | 3.518 | 3.318 |
| Pot Cap-1 Maneuver | - | - | 1094 | - | 265 | 597 |
| Stage 1 | - | - | - | - | 632 | - |
| Stage 2 | - | - | - | - | 579 | - |
| Platoon blocked, % | - | - | | - | | |
| Mov Cap-1 Maneuver | - | - | 1094 | - | 260 | 597 |
| Mov Cap-2 Maneuver | - | - | - | - | 260 | - |
| Stage 1 | - | - | - | - | 632 | - |
| Stage 2 | - | - | - | - | 567 | - |

| Approach | EB | WB | NB |
|---|---|---|---|
| HCM Control Delay, s | 0 | 0.3 | 12.2 |
| HCM LOS | | | B |

| Minor Lane/Major Mvmt | NBLn1 | EBT | EBR | WBL | WBT |
|---|---|---|---|---|---|
| Capacity (veh/h) | 558 | - | - | 1094 | - |
| HCM Lane V/C Ratio | 0.109 | - | - | 0.02 | - |
| HCM Control Delay (s) | 12.2 | - | - | 8.4 | - |
| HCM Lane LOS | B | - | - | A | - |
| HCM 95th %tile Q(veh) | 0.4 | - | - | 0.1 | - |

| Intersection | |
|---|---|
| Int Delay, s/veh | 2.4 |

| Movement | WBL | WBR | NBT | NBR | SBL | SBT |
|---|---|---|---|---|---|---|
| Vol, veh/h | 3 | 43 | 91 | 3 | 8 | 49 |
| Conflicting Peds, #/hr | 0 | 0 | 0 | 0 | 0 | 0 |
| Sign Control | Stop | Stop | Free | Free | Free | Free |
| RT Channelized | - | None | - | None | - | None |
| Storage Length | 0 | - | - | - | 50 | - |
| Veh in Median Storage, # | 0 | - | 0 | - | - | 0 |
| Grade, % | 0 | - | 0 | - | - | 0 |
| Peak Hour Factor | 92 | 92 | 92 | 92 | 92 | 92 |
| Heavy Vehicles, % | 2 | 2 | 2 | 2 | 2 | 2 |
| Mvmt Flow | 3 | 47 | 99 | 3 | 9 | 53 |

| Major/Minor | Minor1 | | Major1 | | Major2 | |
|---|---|---|---|---|---|---|
| Conflicting Flow All | 172 | 101 | 0 | 0 | 102 | 0 |
| Stage 1 | 101 | - | - | - | - | - |
| Stage 2 | 71 | - | - | - | - | - |
| Critical Hdwy | 6.42 | 6.22 | - | - | 4.12 | - |
| Critical Hdwy Stg 1 | 5.42 | - | - | - | - | - |
| Critical Hdwy Stg 2 | 5.42 | - | - | - | - | - |
| Follow-up Hdwy | 3.518 | 3.318 | - | - | 2.218 | - |
| Pot Cap-1 Maneuver | 818 | 954 | - | - | 1490 | - |
| Stage 1 | 923 | - | - | - | - | - |
| Stage 2 | 952 | - | - | - | - | - |
| Platoon blocked, % | | | - | - | | - |
| Mov Cap-1 Maneuver | 813 | 954 | - | - | 1490 | - |
| Mov Cap-2 Maneuver | 813 | - | - | - | - | - |
| Stage 1 | 923 | - | - | - | - | - |
| Stage 2 | 946 | - | - | - | - | - |

| Approach | WB | NB | SB |
|---|---|---|---|
| HCM Control Delay, s | 9 | 0 | 1 |
| HCM LOS | A | | |

| Minor Lane/Major Mvmt | NBT | NBR | WBLn1 | SBL | SBT |
|---|---|---|---|---|---|
| Capacity (veh/h) | - | - | 943 | 1490 | - |
| HCM Lane V/C Ratio | - | - | 0.053 | 0.006 | - |
| HCM Control Delay (s) | - | - | 9 | 7.4 | - |
| HCM Lane LOS | - | - | A | A | - |
| HCM 95th %tile Q(veh) | - | - | 0.2 | 0 | - |

| Intersection | |
|---|---|
| Int Delay, s/veh | 2 |

| Movement | EBL | EBT | WBT | WBR | SBL | SBR |
|---|---|---|---|---|---|---|
| Vol, veh/h | 79 | 252 | 206 | 21 | 13 | 43 |
| Conflicting Peds, #/hr | 0 | 0 | 0 | 0 | 0 | 0 |
| Sign Control | Free | Free | Free | Free | Stop | Stop |
| RT Channelized | - | None | - | None | - | None |
| Storage Length | - | - | - | - | 0 | 0 |
| Veh in Median Storage, # | - | 0 | 0 | - | 0 | - |
| Grade, % | - | 0 | 0 | - | 0 | - |
| Peak Hour Factor | 92 | 92 | 92 | 92 | 92 | 92 |
| Heavy Vehicles, % | 2 | 2 | 2 | 2 | 2 | 2 |
| Mvmt Flow | 86 | 274 | 224 | 23 | 14 | 47 |

| Major/Minor | Major1 | | Major2 | | Minor2 | |
|---|---|---|---|---|---|---|
| Conflicting Flow All | 247 | 0 | - | 0 | 681 | 235 |
| Stage 1 | - | - | - | - | 235 | - |
| Stage 2 | - | - | - | - | 446 | - |
| Critical Hdwy | 4.12 | - | - | - | 6.42 | 6.22 |
| Critical Hdwy Stg 1 | - | - | - | - | 5.42 | - |
| Critical Hdwy Stg 2 | - | - | - | - | 5.42 | - |
| Follow-up Hdwy | 2.218 | - | - | - | 3.518 | 3.318 |
| Pot Cap-1 Maneuver | 1319 | - | - | - | 416 | 804 |
| Stage 1 | - | - | - | - | 804 | - |
| Stage 2 | - | - | - | - | 645 | - |
| Platoon blocked, % | | - | - | - | | |
| Mov Cap-1 Maneuver | 1319 | - | - | - | 384 | 804 |
| Mov Cap-2 Maneuver | - | - | - | - | 384 | - |
| Stage 1 | - | - | - | - | 804 | - |
| Stage 2 | - | - | - | - | 595 | - |

| Approach | EB | WB | SB |
|---|---|---|---|
| HCM Control Delay, s | 1.9 | 0 | 10.9 |
| HCM LOS | | | B |

| Minor Lane/Major Mvmt | EBL | EBT | WBT | WBR | SBLn1 | SBLn2 |
|---|---|---|---|---|---|---|
| Capacity (veh/h) | 1319 | - | - | - | 384 | 804 |
| HCM Lane V/C Ratio | 0.065 | - | - | - | 0.037 | 0.058 |
| HCM Control Delay (s) | 7.9 | 0 | - | - | 14.7 | 9.8 |
| HCM Lane LOS | A | A | - | - | B | A |
| HCM 95th %tile Q(veh) | 0.2 | - | - | - | 0.1 | 0.2 |

| Intersection | |
|---|---|
| Int Delay, s/veh | 1.4 |

| Movement | EBL | EBT | WBT | WBR | SBL | SBR |
|---|---|---|---|---|---|---|
| Vol, veh/h | 4 | 275 | 194 | 10 | 42 | 18 |
| Conflicting Peds, #/hr | 0 | 0 | 0 | 0 | 0 | 0 |
| Sign Control | Free | Free | Free | Free | Stop | Stop |
| RT Channelized | - | None | - | None | - | None |
| Storage Length | 0 | - | - | - | 0 | - |
| Veh in Median Storage, # | - | 0 | 0 | - | 0 | - |
| Grade, % | - | 0 | 0 | - | 0 | - |
| Peak Hour Factor | 92 | 92 | 92 | 92 | 92 | 92 |
| Heavy Vehicles, % | 2 | 2 | 2 | 2 | 2 | 2 |
| Mvmt Flow | 4 | 299 | 211 | 11 | 46 | 20 |

| Major/Minor | Major1 | | Major2 | | Minor2 | |
|---|---|---|---|---|---|---|
| Conflicting Flow All | 222 | 0 | - | 0 | 524 | 216 |
| Stage 1 | - | - | - | - | 216 | - |
| Stage 2 | - | - | - | - | 308 | - |
| Critical Hdwy | 4.12 | - | - | - | 6.42 | 6.22 |
| Critical Hdwy Stg 1 | - | - | - | - | 5.42 | - |
| Critical Hdwy Stg 2 | - | - | - | - | 5.42 | - |
| Follow-up Hdwy | 2.218 | - | - | - | 3.518 | 3.318 |
| Pot Cap-1 Maneuver | 1347 | - | - | - | 514 | 824 |
| Stage 1 | - | - | - | - | 820 | - |
| Stage 2 | - | - | - | - | 745 | - |
| Platoon blocked, % | | - | - | - | | |
| Mov Cap-1 Maneuver | 1347 | - | - | - | 512 | 824 |
| Mov Cap-2 Maneuver | - | - | - | - | 512 | - |
| Stage 1 | - | - | - | - | 820 | - |
| Stage 2 | - | - | - | - | 743 | - |

| Approach | EB | WB | SB |
|---|---|---|---|
| HCM Control Delay, s | 0.1 | 0 | 12 |
| HCM LOS | | | B |

| Minor Lane/Major Mvmt | EBL | EBT | WBT | WBR | SBLn1 |
|---|---|---|---|---|---|
| Capacity (veh/h) | 1347 | - | - | - | 578 |
| HCM Lane V/C Ratio | 0.003 | - | - | - | 0.113 |
| HCM Control Delay (s) | 7.7 | - | - | - | 12 |
| HCM Lane LOS | A | - | - | - | B |
| HCM 95th %tile Q(veh) | 0 | - | - | - | 0.4 |

| Movement | EBL | EBT | EBR | WBL | WBT | WBR | NBL | NBT | NBR | SBL | SBT | SBR |
|---|---|---|---|---|---|---|---|---|---|---|---|---|
| Lane Configurations | | | | | | | | | | | | |
| Volume (veh/h) | 4 | 571 | 120 | 147 | 377 | 12 | 77 | 12 | 80 | 5 | 16 | 6 |
| Number | 5 | 2 | 12 | 1 | 6 | 16 | 3 | 8 | 18 | 7 | 4 | 14 |
| Initial Q (Qb), veh | 0 | 0 | 0 | 0 | 0 | 0 | 0 | 0 | 0 | 0 | 0 | 0 |
| Ped-Bike Adj(A_pbT) | 1.00 | | 1.00 | 1.00 | | 1.00 | 1.00 | | 1.00 | 1.00 | | 1.00 |
| Parking Bus, Adj | 1.00 | 1.00 | 1.00 | 1.00 | 1.00 | 1.00 | 1.00 | 1.00 | 1.00 | 1.00 | 1.00 | 1.00 |
| Adj Sat Flow, veh/h/ln | 1593 | 1593 | 1625 | 1593 | 1593 | 1625 | 1593 | 1593 | 1625 | 1593 | 1593 | 1625 |
| Adj Flow Rate, veh/h | 4 | 621 | 121 | 160 | 410 | 11 | 84 | 13 | 39 | 5 | 17 | 3 |
| Adj No. of Lanes | 1 | 1 | 0 | 1 | 1 | 0 | 1 | 1 | 0 | 1 | 1 | 0 |
| Peak Hour Factor | 0.92 | 0.92 | 0.92 | 0.92 | 0.92 | 0.92 | 0.92 | 0.92 | 0.92 | 0.92 | 0.92 | 0.92 |
| Percent Heavy Veh, % | 2 | 2 | 2 | 2 | 2 | 2 | 2 | 2 | 2 | 2 | 2 | 2 |
| Cap, veh/h | 742 | 977 | 190 | 479 | 1164 | 31 | 226 | 35 | 106 | 192 | 133 | 23 |
| Arrive On Green | 0.75 | 0.75 | 0.75 | 0.75 | 0.75 | 0.75 | 0.10 | 0.10 | 0.10 | 0.10 | 0.10 | 0.10 |
| Sat Flow, veh/h | 962 | 1296 | 253 | 715 | 1544 | 41 | 1386 | 352 | 1055 | 1347 | 1319 | 233 |
| Grp Volume(v), veh/h | 4 | 0 | 742 | 160 | 0 | 421 | 84 | 0 | 52 | 5 | 0 | 20 |
| Grp Sat Flow(s),veh/h/ln | 962 | 0 | 1549 | 715 | 0 | 1586 | 1386 | 0 | 1407 | 1347 | 0 | 1552 |
| Q Serve(g_s), s | 0.1 | 0.0 | 15.9 | 9.6 | 0.0 | 6.2 | 4.1 | 0.0 | 2.4 | 0.2 | 0.0 | 0.8 |
| Cycle Q Clear(g_c), s | 6.3 | 0.0 | 15.9 | 25.4 | 0.0 | 6.2 | 4.9 | 0.0 | 2.4 | 2.7 | 0.0 | 0.8 |
| Prop In Lane | 1.00 | | 0.16 | 1.00 | | 0.03 | 1.00 | | 0.75 | 1.00 | | 0.15 |
| Lane Grp Cap(c), veh/h | 742 | 0 | 1167 | 479 | 0 | 1195 | 226 | 0 | 142 | 192 | 0 | 156 |
| V/C Ratio(X) | 0.01 | 0.00 | 0.64 | 0.33 | 0.00 | 0.35 | 0.37 | 0.00 | 0.37 | 0.03 | 0.00 | 0.13 |
| Avail Cap(c_a), veh/h | 742 | 0 | 1167 | 479 | 0 | 1195 | 463 | 0 | 382 | 422 | 0 | 421 |
| HCM Platoon Ratio | 1.00 | 1.00 | 1.00 | 1.00 | 1.00 | 1.00 | 1.00 | 1.00 | 1.00 | 1.00 | 1.00 | 1.00 |
| Upstream Filter(I) | 1.00 | 0.00 | 1.00 | 1.00 | 0.00 | 1.00 | 1.00 | 0.00 | 1.00 | 1.00 | 0.00 | 1.00 |
| Uniform Delay (d), s/veh | 4.0 | 0.0 | 4.1 | 10.1 | 0.0 | 2.9 | 30.9 | 0.0 | 29.4 | 30.6 | 0.0 | 28.7 |
| Incr Delay (d2), s/veh | 0.0 | 0.0 | 2.7 | 1.9 | 0.0 | 0.8 | 1.0 | 0.0 | 1.6 | 0.1 | 0.0 | 0.4 |
| Initial Q Delay(d3),s/veh | 0.0 | 0.0 | 0.0 | 0.0 | 0.0 | 0.0 | 0.0 | 0.0 | 0.0 | 0.0 | 0.0 | 0.0 |
| %ile BackOfQ(50%),veh/ln | 0.0 | 0.0 | 7.5 | 2.1 | 0.0 | 3.0 | 1.6 | 0.0 | 1.0 | 0.1 | 0.0 | 0.4 |
| LnGrp Delay(d),s/veh | 4.0 | 0.0 | 6.7 | 12.0 | 0.0 | 3.7 | 31.9 | 0.0 | 31.0 | 30.7 | 0.0 | 29.0 |
| LnGrp LOS | A | | A | B | | A | C | | C | C | | C |
| Approach Vol, veh/h | | 746 | | | 581 | | | 136 | | | 25 | |
| Approach Delay, s/veh | | 6.7 | | | 6.0 | | | 31.6 | | | 29.4 | |
| Approach LOS | | A | | | A | | | C | | | C | |

| Timer | 1 | 2 | 3 | 4 | 5 | 6 | 7 | 8 |
|---|---|---|---|---|---|---|---|---|
| Assigned Phs | | 2 | | 4 | | 6 | | 8 |
| Phs Duration (G+Y+Rc), s | | 57.9 | | 12.1 | | 57.9 | | 12.1 |
| Change Period (Y+Rc), s | | * 5.2 | | 5.0 | | * 5.2 | | 5.0 |
| Max Green Setting (Gmax), s | | * 41 | | 19.0 | | * 41 | | 19.0 |
| Max Q Clear Time (g_c+I1), s | | 17.9 | | 4.7 | | 27.4 | | 6.9 |
| Green Ext Time (p_c), s | | 10.4 | | 0.5 | | 7.6 | | 0.4 |

| Intersection Summary | |
|---|---|
| HCM 2010 Ctrl Delay | 9.1 |
| HCM 2010 LOS | A |

Notes

* HCM 2010 computational engine requires equal clearance times for the phases crossing the barrier.

| Intersection | |
|---|---|
| Int Delay, s/veh | 0.9 |

| Movement | EBT | EBR | WBL | WBT | NBL | NBR |
|---|---|---|---|---|---|---|
| Vol, veh/h | 614 | 5 | 56 | 471 | 2 | 33 |
| Conflicting Peds, #/hr | 0 | 0 | 0 | 0 | 0 | 0 |
| Sign Control | Free | Free | Free | Free | Stop | Stop |
| RT Channelized | - | None | - | None | - | None |
| Storage Length | - | - | 0 | - | 0 | - |
| Veh in Median Storage, # | 0 | - | - | 0 | 0 | - |
| Grade, % | 0 | - | - | 0 | 0 | - |
| Peak Hour Factor | 92 | 92 | 92 | 92 | 92 | 92 |
| Heavy Vehicles, % | 2 | 2 | 2 | 2 | 2 | 2 |
| Mvmt Flow | 667 | 5 | 61 | 512 | 2 | 36 |

| Major/Minor | Major1 | | Major2 | | Minor1 | |
|---|---|---|---|---|---|---|
| Conflicting Flow All | 0 | 0 | 673 | 0 | 1304 | 670 |
| Stage 1 | - | - | - | - | 670 | - |
| Stage 2 | - | - | - | - | 634 | - |
| Critical Hdwy | - | - | 4.12 | - | 6.42 | 6.22 |
| Critical Hdwy Stg 1 | - | - | - | - | 5.42 | - |
| Critical Hdwy Stg 2 | - | - | - | - | 5.42 | - |
| Follow-up Hdwy | - | - | 2.218 | - | 3.518 | 3.318 |
| Pot Cap-1 Maneuver | - | - | 918 | - | 177 | 457 |
| Stage 1 | - | - | - | - | 509 | - |
| Stage 2 | - | - | - | - | 529 | - |
| Platoon blocked, % | - | - | | - | | |
| Mov Cap-1 Maneuver | - | - | 918 | - | 165 | 457 |
| Mov Cap-2 Maneuver | - | - | - | - | 165 | - |
| Stage 1 | - | - | - | - | 509 | - |
| Stage 2 | - | - | - | - | 494 | - |

| Approach | EB | WB | NB |
|---|---|---|---|
| HCM Control Delay, s | 0 | 1 | 14.5 |
| HCM LOS | | | B |

| Minor Lane/Major Mvmt | NBLn1 | EBT | EBR | WBL | WBT |
|---|---|---|---|---|---|
| Capacity (veh/h) | 415 | - | - | 918 | - |
| HCM Lane V/C Ratio | 0.092 | - | - | 0.066 | - |
| HCM Control Delay (s) | 14.5 | - | - | 9.2 | - |
| HCM Lane LOS | B | - | - | A | - |
| HCM 95th %tile Q(veh) | 0.3 | - | - | 0.2 | - |

| Intersection | |
|---|---|
| Int Delay, s/veh | 1.6 |

| Movement | WBL | WBR | NBT | NBR | SBL | SBT |
|---|---|---|---|---|---|---|
| Vol, veh/h | 1 | 13 | 75 | 5 | 34 | 104 |
| Conflicting Peds, #/hr | 0 | 0 | 0 | 0 | 0 | 0 |
| Sign Control | Stop | Stop | Free | Free | Free | Free |
| RT Channelized | - | None | - | None | - | None |
| Storage Length | 0 | - | - | - | 50 | - |
| Veh in Median Storage, # | 0 | - | 0 | - | - | 0 |
| Grade, % | 0 | - | 0 | - | - | 0 |
| Peak Hour Factor | 92 | 92 | 92 | 92 | 92 | 92 |
| Heavy Vehicles, % | 2 | 2 | 2 | 2 | 2 | 2 |
| Mvmt Flow | 1 | 14 | 82 | 5 | 37 | 113 |

| Major/Minor | Minor1 | | Major1 | | Major2 | |
|---|---|---|---|---|---|---|
| Conflicting Flow All | 271 | 84 | 0 | 0 | 87 | 0 |
| Stage 1 | 84 | - | - | - | - | - |
| Stage 2 | 187 | - | - | - | - | - |
| Critical Hdwy | 6.42 | 6.22 | - | - | 4.12 | - |
| Critical Hdwy Stg 1 | 5.42 | - | - | - | - | - |
| Critical Hdwy Stg 2 | 5.42 | - | - | - | - | - |
| Follow-up Hdwy | 3.518 | 3.318 | - | - | 2.218 | - |
| Pot Cap-1 Maneuver | 718 | 975 | - | - | 1509 | - |
| Stage 1 | 939 | - | - | - | - | - |
| Stage 2 | 845 | - | - | - | - | - |
| Platoon blocked, % | | | - | - | | - |
| Mov Cap-1 Maneuver | 700 | 975 | - | - | 1509 | - |
| Mov Cap-2 Maneuver | 700 | - | - | - | - | - |
| Stage 1 | 939 | - | - | - | - | - |
| Stage 2 | 824 | - | - | - | - | - |

| Approach | WB | NB | SB |
|---|---|---|---|
| HCM Control Delay, s | 8.9 | 0 | 1.8 |
| HCM LOS | A | | |

| Minor Lane/Major Mvmt | NBT | NBR | WBLn1 | SBL | SBT |
|---|---|---|---|---|---|
| Capacity (veh/h) | - | - | 948 | 1509 | - |
| HCM Lane V/C Ratio | - | - | 0.016 | 0.024 | - |
| HCM Control Delay (s) | - | - | 8.9 | 7.4 | - |
| HCM Lane LOS | - | - | A | A | - |
| HCM 95th %tile Q(veh) | - | - | 0 | 0.1 | - |

| Intersection | |
|---|---|
| Int Delay, s/veh | 2.3 |

| Movement | EBL | EBT | WBT | WBR | SBL | SBR |
|---|---|---|---|---|---|---|
| Vol, veh/h | 40 | 193 | 221 | 30 | 18 | 75 |
| Conflicting Peds, #/hr | 0 | 0 | 0 | 0 | 0 | 0 |
| Sign Control | Free | Free | Free | Free | Stop | Stop |
| RT Channelized | - | None | - | None | - | None |
| Storage Length | - | - | - | - | 0 | 0 |
| Veh in Median Storage, # | - | 0 | 0 | - | 0 | - |
| Grade, % | - | 0 | 0 | - | 0 | - |
| Peak Hour Factor | 92 | 92 | 92 | 92 | 92 | 92 |
| Heavy Vehicles, % | 2 | 2 | 2 | 2 | 2 | 2 |
| Mvmt Flow | 43 | 210 | 240 | 33 | 20 | 82 |

| Major/Minor | Major1 | | Major2 | | Minor2 | |
|---|---|---|---|---|---|---|
| Conflicting Flow All | 273 | 0 | - | 0 | 554 | 257 |
| Stage 1 | - | - | - | - | 257 | - |
| Stage 2 | - | - | - | - | 297 | - |
| Critical Hdwy | 4.12 | - | - | - | 6.42 | 6.22 |
| Critical Hdwy Stg 1 | - | - | - | - | 5.42 | - |
| Critical Hdwy Stg 2 | - | - | - | - | 5.42 | - |
| Follow-up Hdwy | 2.218 | - | - | - | 3.518 | 3.318 |
| Pot Cap-1 Maneuver | 1290 | - | - | - | 493 | 782 |
| Stage 1 | - | - | - | - | 786 | - |
| Stage 2 | - | - | - | - | 754 | - |
| Platoon blocked, % | | - | - | - | | |
| Mov Cap-1 Maneuver | 1290 | - | - | - | 474 | 782 |
| Mov Cap-2 Maneuver | - | - | - | - | 474 | - |
| Stage 1 | - | - | - | - | 786 | - |
| Stage 2 | - | - | - | - | 725 | - |

| Approach | EB | WB | SB |
|---|---|---|---|
| HCM Control Delay, s | 1.4 | 0 | 10.6 |
| HCM LOS | | | B |

| Minor Lane/Major Mvmt | EBL | EBT | WBT | WBR | SBLn1 | SBLn2 |
|---|---|---|---|---|---|---|
| Capacity (veh/h) | 1290 | - | - | - | 474 | 782 |
| HCM Lane V/C Ratio | 0.034 | - | - | - | 0.041 | 0.104 |
| HCM Control Delay (s) | 7.9 | 0 | - | - | 12.9 | 10.1 |
| HCM Lane LOS | A | A | - | - | B | B |
| HCM 95th %tile Q(veh) | 0.1 | - | - | - | 0.1 | 0.3 |

| Intersection | |
|---|---|
| Int Delay, s/veh | 0.9 |

| Movement | EBL | EBT | WBT | WBR | SBL | SBR |
|---|---|---|---|---|---|---|
| Vol, veh/h | 16 | 189 | 251 | 50 | 20 | 9 |
| Conflicting Peds, #/hr | 0 | 0 | 0 | 0 | 0 | 0 |
| Sign Control | Free | Free | Free | Free | Stop | Stop |
| RT Channelized | - | None | - | None | - | None |
| Storage Length | 0 | - | - | - | 0 | - |
| Veh in Median Storage, # | - | 0 | 0 | - | 0 | - |
| Grade, % | - | 0 | 0 | - | 0 | - |
| Peak Hour Factor | 92 | 92 | 92 | 92 | 92 | 92 |
| Heavy Vehicles, % | 2 | 2 | 2 | 2 | 2 | 2 |
| Mvmt Flow | 17 | 205 | 273 | 54 | 22 | 10 |

| Major/Minor | Major1 | | Major2 | | Minor2 | |
|---|---|---|---|---|---|---|
| Conflicting Flow All | 327 | 0 | - | 0 | 540 | 300 |
| Stage 1 | - | - | - | - | 300 | - |
| Stage 2 | - | - | - | - | 240 | - |
| Critical Hdwy | 4.12 | - | - | - | 6.42 | 6.22 |
| Critical Hdwy Stg 1 | - | - | - | - | 5.42 | - |
| Critical Hdwy Stg 2 | - | - | - | - | 5.42 | - |
| Follow-up Hdwy | 2.218 | - | - | - | 3.518 | 3.318 |
| Pot Cap-1 Maneuver | 1233 | - | - | - | 503 | 740 |
| Stage 1 | - | - | - | - | 752 | - |
| Stage 2 | - | - | - | - | 800 | - |
| Platoon blocked, % | | - | - | - | | |
| Mov Cap-1 Maneuver | 1233 | - | - | - | 496 | 740 |
| Mov Cap-2 Maneuver | - | - | - | - | 496 | - |
| Stage 1 | - | - | - | - | 752 | - |
| Stage 2 | - | - | - | - | 789 | - |

| Approach | EB | WB | SB |
|---|---|---|---|
| HCM Control Delay, s | 0.6 | 0 | 11.9 |
| HCM LOS | | | B |

| Minor Lane/Major Mvmt | EBL | EBT | WBT | WBR | SBLn1 |
|---|---|---|---|---|---|
| Capacity (veh/h) | 1233 | - | - | - | 553 |
| HCM Lane V/C Ratio | 0.014 | - | - | - | 0.057 |
| HCM Control Delay (s) | 8 | - | - | - | 11.9 |
| HCM Lane LOS | A | - | - | - | B |
| HCM 95th %tile Q(veh) | 0 | - | - | - | 0.2 |

# Appendix C

SimTraffic Analysis Results

## Intersection: 1: Missouri Avenue & 15th Street

| Movement | EB | EB | WB | WB | NB | NB | SB | SB |
|---|---|---|---|---|---|---|---|---|
| Directions Served | L | TR | L | TR | L | TR | L | TR |
| Maximum Queue (ft) | 32 | 137 | 73 | 182 | 75 | 168 | 23 | 39 |
| Average Queue (ft) | 3 | 54 | 22 | 60 | 52 | 57 | 2 | 9 |
| 95th Queue (ft) | 19 | 115 | 60 | 135 | 80 | 124 | 15 | 32 |
| Link Distance (ft) | | 795 | | 1667 | | 1552 | | 171 |
| Upstream Blk Time (%) | | | | | | | | |
| Queuing Penalty (veh) | | | | | | | | |
| Storage Bay Dist (ft) | 50 | | 50 | | 50 | | 50 | |
| Storage Blk Time (%) | 0 | 6 | 1 | 7 | 21 | 4 | 0 | 0 |
| Queuing Penalty (veh) | 0 | 0 | 3 | 3 | 24 | 4 | 0 | 0 |

## Intersection: 2: Pinyon Parkway & 15th Street

| Movement | WB | NB |
|---|---|---|
| Directions Served | L | LR |
| Maximum Queue (ft) | 26 | 35 |
| Average Queue (ft) | 2 | 9 |
| 95th Queue (ft) | 16 | 31 |
| Link Distance (ft) | 1223 | 184 |
| Upstream Blk Time (%) | | |
| Queuing Penalty (veh) | | |
| Storage Bay Dist (ft) | | |
| Storage Blk Time (%) | | |
| Queuing Penalty (veh) | | |

## Intersection: 3: Missouri Avenue & Pinyon Parkway

| Movement | WB | SB |
|---|---|---|
| Directions Served | LR | L |
| Maximum Queue (ft) | 55 | 25 |
| Average Queue (ft) | 29 | 1 |
| 95th Queue (ft) | 48 | 11 |
| Link Distance (ft) | 442 | |
| Upstream Blk Time (%) | | |
| Queuing Penalty (veh) | | |
| Storage Bay Dist (ft) | | 50 |
| Storage Blk Time (%) | | 0 |
| Queuing Penalty (veh) | | 0 |

## Intersection: 4: 21st Street & Missouri Avenue

| Movement | EB | WB | SB | SB |
|---|---|---|---|---|
| Directions Served | LT | TR | L | R |
| Maximum Queue (ft) | 54 | 2 | 34 | 51 |
| Average Queue (ft) | 10 | 0 | 8 | 20 |
| 95th Queue (ft) | 37 | 2 | 31 | 44 |
| Link Distance (ft) | 786 | 997 | 957 | 957 |
| Upstream Blk Time (%) | | | | |
| Queuing Penalty (veh) | | | | |
| Storage Bay Dist (ft) | | | | |
| Storage Blk Time (%) | | | | |
| Queuing Penalty (veh) | | | | |

## Intersection: 5: 21st Street & Jasper Drive

| Movement | EB | SB |
|---|---|---|
| Directions Served | L | LR |
| Maximum Queue (ft) | 14 | 62 |
| Average Queue (ft) | 1 | 28 |
| 95th Queue (ft) | 7 | 53 |
| Link Distance (ft) | 997 | 490 |
| Upstream Blk Time (%) | | |
| Queuing Penalty (veh) | | |
| Storage Bay Dist (ft) | | |
| Storage Blk Time (%) | | |
| Queuing Penalty (veh) | | |

## Network Summary

Network wide Queuing Penalty: 35

## Intersection: 1: Missouri Avenue & 15th Street

| Movement | EB | EB | WB | WB | NB | NB | SB | SB |
|---|---|---|---|---|---|---|---|---|
| Directions Served | L | TR | L | TR | L | TR | L | TR |
| Maximum Queue (ft) | 23 | 194 | 75 | 173 | 74 | 112 | 31 | 48 |
| Average Queue (ft) | 1 | 65 | 46 | 49 | 34 | 39 | 4 | 12 |
| 95th Queue (ft) | 13 | 145 | 77 | 125 | 67 | 79 | 19 | 38 |
| Link Distance (ft) | | 795 | | 1667 | | 1552 | | 171 |
| Upstream Blk Time (%) | | | | | | | | |
| Queuing Penalty (veh) | | | | | | | | |
| Storage Bay Dist (ft) | 50 | | 50 | | 50 | | 50 | |
| Storage Blk Time (%) | | 7 | 9 | 4 | 8 | 3 | 0 | 1 |
| Queuing Penalty (veh) | | 0 | 28 | 6 | 6 | 2 | 0 | 0 |

## Intersection: 2: Pinyon Parkway & 15th Street

| Movement | WB | NB |
|---|---|---|
| Directions Served | L | LR |
| Maximum Queue (ft) | 22 | 31 |
| Average Queue (ft) | 2 | 8 |
| 95th Queue (ft) | 14 | 29 |
| Link Distance (ft) | 1223 | 184 |
| Upstream Blk Time (%) | | |
| Queuing Penalty (veh) | | |
| Storage Bay Dist (ft) | | |
| Storage Blk Time (%) | | |
| Queuing Penalty (veh) | | |

## Intersection: 3: Missouri Avenue & Pinyon Parkway

| Movement | WB | SB |
|---|---|---|
| Directions Served | LR | L |
| Maximum Queue (ft) | 33 | 34 |
| Average Queue (ft) | 16 | 4 |
| 95th Queue (ft) | 40 | 20 |
| Link Distance (ft) | 442 | |
| Upstream Blk Time (%) | | |
| Queuing Penalty (veh) | | |
| Storage Bay Dist (ft) | | 50 |
| Storage Blk Time (%) | | 0 |
| Queuing Penalty (veh) | | 0 |

## Intersection: 4: 21st Street & Missouri Avenue

| Movement | EB | SB | SB |
|---|---|---|---|
| Directions Served | LT | L | R |
| Maximum Queue (ft) | 50 | 38 | 55 |
| Average Queue (ft) | 6 | 11 | 25 |
| 95th Queue (ft) | 31 | 36 | 48 |
| Link Distance (ft) | 786 | 957 | 957 |
| Upstream Blk Time (%) | | | |
| Queuing Penalty (veh) | | | |
| Storage Bay Dist (ft) | | | |
| Storage Blk Time (%) | | | |
| Queuing Penalty (veh) | | | |

## Intersection: 5: 21st Street & Jasper Drive

| Movement | EB | SB |
|---|---|---|
| Directions Served | L | LR |
| Maximum Queue (ft) | 28 | 41 |
| Average Queue (ft) | 2 | 15 |
| 95th Queue (ft) | 16 | 41 |
| Link Distance (ft) | 997 | 490 |
| Upstream Blk Time (%) | | |
| Queuing Penalty (veh) | | |
| Storage Bay Dist (ft) | | |
| Storage Blk Time (%) | | |
| Queuing Penalty (veh) | | |

## Network Summary

Network wide Queuing Penalty: 42

## Intersection: 1: Missouri Avenue & 15th Street

| Movement | EB | EB | WB | WB | NB | NB | SB | SB |
|---|---|---|---|---|---|---|---|---|
| Directions Served | L | TR | L | TR | L | TR | L | TR |
| Maximum Queue (ft) | 34 | 148 | 73 | 173 | 74 | 174 | 25 | 39 |
| Average Queue (ft) | 3 | 56 | 22 | 60 | 53 | 58 | 2 | 9 |
| 95th Queue (ft) | 20 | 117 | 58 | 134 | 81 | 126 | 16 | 32 |
| Link Distance (ft) | | 795 | | 1667 | | 1552 | | 171 |
| Upstream Blk Time (%) | | | | | | | | |
| Queuing Penalty (veh) | | | | | | | | |
| Storage Bay Dist (ft) | 50 | | 50 | | 50 | | 50 | |
| Storage Blk Time (%) | 0 | 7 | 1 | 7 | 23 | 4 | 0 | 0 |
| Queuing Penalty (veh) | 0 | 0 | 4 | 3 | 27 | 4 | 0 | 0 |

## Intersection: 2: Pinyon Parkway & 15th Street

| Movement | WB | NB |
|---|---|---|
| Directions Served | L | LR |
| Maximum Queue (ft) | 28 | 33 |
| Average Queue (ft) | 2 | 9 |
| 95th Queue (ft) | 15 | 32 |
| Link Distance (ft) | 1223 | 184 |
| Upstream Blk Time (%) | | |
| Queuing Penalty (veh) | | |
| Storage Bay Dist (ft) | | |
| Storage Blk Time (%) | | |
| Queuing Penalty (veh) | | |

## Intersection: 3: Missouri Avenue & Pinyon Parkway

| Movement | WB | SB |
|---|---|---|
| Directions Served | LR | L |
| Maximum Queue (ft) | 52 | 11 |
| Average Queue (ft) | 29 | 1 |
| 95th Queue (ft) | 46 | 8 |
| Link Distance (ft) | 442 | |
| Upstream Blk Time (%) | | |
| Queuing Penalty (veh) | | |
| Storage Bay Dist (ft) | | 50 |
| Storage Blk Time (%) | | |
| Queuing Penalty (veh) | | |

## Intersection: 4: 21st Street & Missouri Avenue

| Movement | EB | WB | SB | SB |
|---|---|---|---|---|
| Directions Served | LT | TR | L | R |
| Maximum Queue (ft) | 64 | 4 | 30 | 46 |
| Average Queue (ft) | 11 | 0 | 8 | 19 |
| 95th Queue (ft) | 42 | 3 | 30 | 43 |
| Link Distance (ft) | 786 | 997 | 957 | 957 |
| Upstream Blk Time (%) | | | | |
| Queuing Penalty (veh) | | | | |
| Storage Bay Dist (ft) | | | | |
| Storage Blk Time (%) | | | | |
| Queuing Penalty (veh) | | | | |

## Intersection: 5: 21st Street & Jasper Drive

| Movement | EB | SB |
|---|---|---|
| Directions Served | L | LR |
| Maximum Queue (ft) | 19 | 61 |
| Average Queue (ft) | 1 | 27 |
| 95th Queue (ft) | 8 | 53 |
| Link Distance (ft) | 997 | 490 |
| Upstream Blk Time (%) | | |
| Queuing Penalty (veh) | | |
| Storage Bay Dist (ft) | | |
| Storage Blk Time (%) | | |
| Queuing Penalty (veh) | | |

## Network Summary

Network wide Queuing Penalty: 39

## Intersection: 1: Missouri Avenue & 15th Street

| Movement | EB | EB | WB | WB | NB | NB | SB | SB |
|---|---|---|---|---|---|---|---|---|
| Directions Served | L | TR | L | TR | L | TR | L | TR |
| Maximum Queue (ft) | 21 | 192 | 75 | 207 | 73 | 110 | 30 | 49 |
| Average Queue (ft) | 1 | 70 | 46 | 60 | 33 | 39 | 4 | 11 |
| 95th Queue (ft) | 12 | 151 | 79 | 158 | 68 | 80 | 20 | 37 |
| Link Distance (ft) | | 795 | | 1667 | | 1552 | | 171 |
| Upstream Blk Time (%) | | | | | | | | |
| Queuing Penalty (veh) | | | | | | | | |
| Storage Bay Dist (ft) | 50 | | 50 | | 50 | | 50 | |
| Storage Blk Time (%) | | 8 | 11 | 4 | 8 | 4 | 0 | 1 |
| Queuing Penalty (veh) | | 0 | 33 | 6 | 6 | 2 | 0 | 0 |

## Intersection: 2: Pinyon Parkway & 15th Street

| Movement | WB | NB |
|---|---|---|
| Directions Served | L | LR |
| Maximum Queue (ft) | 20 | 33 |
| Average Queue (ft) | 2 | 7 |
| 95th Queue (ft) | 13 | 28 |
| Link Distance (ft) | 1223 | 184 |
| Upstream Blk Time (%) | | |
| Queuing Penalty (veh) | | |
| Storage Bay Dist (ft) | | |
| Storage Blk Time (%) | | |
| Queuing Penalty (veh) | | |

## Intersection: 3: Missouri Avenue & Pinyon Parkway

| Movement | WB | SB |
|---|---|---|
| Directions Served | LR | L |
| Maximum Queue (ft) | 31 | 35 |
| Average Queue (ft) | 16 | 4 |
| 95th Queue (ft) | 40 | 21 |
| Link Distance (ft) | 442 | |
| Upstream Blk Time (%) | | |
| Queuing Penalty (veh) | | |
| Storage Bay Dist (ft) | | 50 |
| Storage Blk Time (%) | | 0 |
| Queuing Penalty (veh) | | 0 |

## Intersection: 4: 21st Street & Missouri Avenue

| Movement | EB | SB | SB |
|---|---|---|---|
| Directions Served | LT | L | R |
| Maximum Queue (ft) | 51 | 38 | 54 |
| Average Queue (ft) | 7 | 12 | 26 |
| 95th Queue (ft) | 30 | 37 | 48 |
| Link Distance (ft) | 786 | 957 | 957 |
| Upstream Blk Time (%) | | | |
| Queuing Penalty (veh) | | | |
| Storage Bay Dist (ft) | | | |
| Storage Blk Time (%) | | | |
| Queuing Penalty (veh) | | | |

## Intersection: 5: 21st Street & Jasper Drive

| Movement | EB | SB |
|---|---|---|
| Directions Served | L | LR |
| Maximum Queue (ft) | 28 | 39 |
| Average Queue (ft) | 3 | 15 |
| 95th Queue (ft) | 19 | 41 |
| Link Distance (ft) | 997 | 490 |
| Upstream Blk Time (%) | | |
| Queuing Penalty (veh) | | |
| Storage Bay Dist (ft) | | |
| Storage Blk Time (%) | | |
| Queuing Penalty (veh) | | |

## Network Summary

Network wide Queuing Penalty: 48

## Intersection: 1: Missouri Avenue & 15th Street

| Movement | EB | EB | WB | WB | NB | NB | SB | SB |
|---|---|---|---|---|---|---|---|---|
| Directions Served | L | TR | L | TR | L | TR | L | TR |
| Maximum Queue (ft) | 36 | 142 | 72 | 170 | 75 | 183 | 27 | 42 |
| Average Queue (ft) | 4 | 61 | 25 | 71 | 58 | 72 | 2 | 11 |
| 95th Queue (ft) | 21 | 117 | 61 | 145 | 82 | 146 | 13 | 35 |
| Link Distance (ft) | | 795 | | 1667 | | 1552 | | 171 |
| Upstream Blk Time (%) | | | | | | | | |
| Queuing Penalty (veh) | | | | | | | | |
| Storage Bay Dist (ft) | 50 | | 50 | | 50 | | 50 | |
| Storage Blk Time (%) | 0 | 8 | 2 | 9 | 25 | 6 | 0 | 0 |
| Queuing Penalty (veh) | 0 | 1 | 6 | 5 | 35 | 8 | 0 | 0 |

## Intersection: 2: Pinyon Parkway & 15th Street

| Movement | WB | NB |
|---|---|---|
| Directions Served | L | LR |
| Maximum Queue (ft) | 28 | 33 |
| Average Queue (ft) | 2 | 8 |
| 95th Queue (ft) | 16 | 30 |
| Link Distance (ft) | 1223 | 184 |
| Upstream Blk Time (%) | | |
| Queuing Penalty (veh) | | |
| Storage Bay Dist (ft) | | |
| Storage Blk Time (%) | | |
| Queuing Penalty (veh) | | |

## Intersection: 3: Missouri Avenue & Pinyon Parkway

| Movement | WB | SB |
|---|---|---|
| Directions Served | LR | L |
| Maximum Queue (ft) | 65 | 22 |
| Average Queue (ft) | 34 | 2 |
| 95th Queue (ft) | 52 | 12 |
| Link Distance (ft) | 442 | |
| Upstream Blk Time (%) | | |
| Queuing Penalty (veh) | | |
| Storage Bay Dist (ft) | | 50 |
| Storage Blk Time (%) | | 0 |
| Queuing Penalty (veh) | | 0 |

## Intersection: 4: 21st Street & Missouri Avenue

| Movement | EB | WB | SB | SB |
|---|---|---|---|---|
| Directions Served | LT | TR | L | R |
| Maximum Queue (ft) | 60 | 6 | 34 | 55 |
| Average Queue (ft) | 13 | 0 | 8 | 22 |
| 95th Queue (ft) | 45 | 4 | 30 | 49 |
| Link Distance (ft) | 786 | 997 | 957 | 957 |
| Upstream Blk Time (%) | | | | |
| Queuing Penalty (veh) | | | | |
| Storage Bay Dist (ft) | | | | |
| Storage Blk Time (%) | | | | |
| Queuing Penalty (veh) | | | | |

## Intersection: 5: 21st Street & Jasper Drive

| Movement | EB | SB |
|---|---|---|
| Directions Served | L | LR |
| Maximum Queue (ft) | 17 | 66 |
| Average Queue (ft) | 1 | 30 |
| 95th Queue (ft) | 7 | 56 |
| Link Distance (ft) | 997 | 490 |
| Upstream Blk Time (%) | | |
| Queuing Penalty (veh) | | |
| Storage Bay Dist (ft) | | |
| Storage Blk Time (%) | | |
| Queuing Penalty (veh) | | |

## Network Summary

Network wide Queuing Penalty: 54

## Intersection: 1: Missouri Avenue & 15th Street

| Movement | EB | EB | WB | WB | NB | NB | SB | SB |
|---|---|---|---|---|---|---|---|---|
| Directions Served | L | TR | L | TR | L | TR | L | TR |
| Maximum Queue (ft) | 26 | 207 | 75 | 229 | 73 | 126 | 27 | 54 |
| Average Queue (ft) | 1 | 82 | 53 | 68 | 38 | 45 | 3 | 13 |
| 95th Queue (ft) | 12 | 167 | 81 | 167 | 71 | 94 | 18 | 41 |
| Link Distance (ft) | | 795 | | 1667 | | 1552 | | 171 |
| Upstream Blk Time (%) | | | | | | | | |
| Queuing Penalty (veh) | | | | | | | | |
| Storage Bay Dist (ft) | 50 | | 50 | | 50 | | 50 | |
| Storage Blk Time (%) | 0 | 10 | 16 | 5 | 10 | 5 | 0 | 1 |
| Queuing Penalty (veh) | 0 | 0 | 49 | 8 | 9 | 3 | 0 | 0 |

## Intersection: 2: Pinyon Parkway & 15th Street

| Movement | WB | NB |
|---|---|---|
| Directions Served | L | LR |
| Maximum Queue (ft) | 22 | 30 |
| Average Queue (ft) | 1 | 5 |
| 95th Queue (ft) | 12 | 24 |
| Link Distance (ft) | 1223 | 184 |
| Upstream Blk Time (%) | | |
| Queuing Penalty (veh) | | |
| Storage Bay Dist (ft) | | |
| Storage Blk Time (%) | | |
| Queuing Penalty (veh) | | |

## Intersection: 3: Missouri Avenue & Pinyon Parkway

| Movement | WB | SB |
|---|---|---|
| Directions Served | LR | L |
| Maximum Queue (ft) | 55 | 39 |
| Average Queue (ft) | 24 | 6 |
| 95th Queue (ft) | 48 | 27 |
| Link Distance (ft) | 442 | |
| Upstream Blk Time (%) | | |
| Queuing Penalty (veh) | | |
| Storage Bay Dist (ft) | | 50 |
| Storage Blk Time (%) | | 0 |
| Queuing Penalty (veh) | | 0 |

## Intersection: 4: 21st Street & Missouri Avenue

| Movement | EB | SB | SB |
|---|---|---|---|
| Directions Served | LT | L | R |
| Maximum Queue (ft) | 45 | 40 | 56 |
| Average Queue (ft) | 8 | 10 | 27 |
| 95th Queue (ft) | 33 | 35 | 48 |
| Link Distance (ft) | 786 | 957 | 957 |
| Upstream Blk Time (%) | | | |
| Queuing Penalty (veh) | | | |
| Storage Bay Dist (ft) | | | |
| Storage Blk Time (%) | | | |
| Queuing Penalty (veh) | | | |

## Intersection: 5: 21st Street & Jasper Drive

| Movement | EB | SB |
|---|---|---|
| Directions Served | L | LR |
| Maximum Queue (ft) | 35 | 37 |
| Average Queue (ft) | 4 | 19 |
| 95th Queue (ft) | 22 | 44 |
| Link Distance (ft) | 997 | 490 |
| Upstream Blk Time (%) | | |
| Queuing Penalty (veh) | | |
| Storage Bay Dist (ft) | | |
| Storage Blk Time (%) | | |
| Queuing Penalty (veh) | | |

## Network Summary

Network wide Queuing Penalty: 69

## Intersection: 1: Missouri Avenue & 15th Street

| Movement | EB | EB | WB | WB | NB | NB | SB | SB |
|---|---|---|---|---|---|---|---|---|
| Directions Served | L | TR | L | TR | L | TR | L | TR |
| Maximum Queue (ft) | 46 | 174 | 72 | 229 | 74 | 210 | 31 | 44 |
| Average Queue (ft) | 5 | 77 | 30 | 96 | 59 | 85 | 3 | 10 |
| 95th Queue (ft) | 27 | 143 | 68 | 193 | 84 | 173 | 18 | 35 |
| Link Distance (ft) | | 795 | | 1667 | | 1552 | | 171 |
| Upstream Blk Time (%) | | | | | | | | |
| Queuing Penalty (veh) | | | | | | | | |
| Storage Bay Dist (ft) | 50 | | 50 | | 50 | | 50 | |
| Storage Blk Time (%) | 0 | 11 | 3 | 13 | 27 | 7 | 0 | 1 |
| Queuing Penalty (veh) | 0 | 1 | 12 | 7 | 40 | 10 | 0 | 0 |

## Intersection: 2: Pinyon Parkway & 15th Street

| Movement | WB | NB |
|---|---|---|
| Directions Served | L | LR |
| Maximum Queue (ft) | 25 | 33 |
| Average Queue (ft) | 2 | 8 |
| 95th Queue (ft) | 13 | 30 |
| Link Distance (ft) | 1223 | 184 |
| Upstream Blk Time (%) | | |
| Queuing Penalty (veh) | | |
| Storage Bay Dist (ft) | | |
| Storage Blk Time (%) | | |
| Queuing Penalty (veh) | | |

## Intersection: 3: Missouri Avenue & Pinyon Parkway

| Movement | WB | SB |
|---|---|---|
| Directions Served | LR | L |
| Maximum Queue (ft) | 60 | 22 |
| Average Queue (ft) | 29 | 2 |
| 95th Queue (ft) | 49 | 13 |
| Link Distance (ft) | 442 | |
| Upstream Blk Time (%) | | |
| Queuing Penalty (veh) | | |
| Storage Bay Dist (ft) | | 50 |
| Storage Blk Time (%) | | 0 |
| Queuing Penalty (veh) | | 0 |

## Intersection: 4: 21st Street & Missouri Avenue

| Movement | EB | WB | SB | SB |
|---|---|---|---|---|
| Directions Served | LT | TR | L | R |
| Maximum Queue (ft) | 68 | 2 | 40 | 57 |
| Average Queue (ft) | 18 | 0 | 10 | 23 |
| 95th Queue (ft) | 53 | 2 | 34 | 48 |
| Link Distance (ft) | 786 | 997 | 957 | 957 |
| Upstream Blk Time (%) | | | | |
| Queuing Penalty (veh) | | | | |
| Storage Bay Dist (ft) | | | | |
| Storage Blk Time (%) | | | | |
| Queuing Penalty (veh) | | | | |

## Intersection: 5: 21st Street & Jasper Drive

| Movement | EB | SB |
|---|---|---|
| Directions Served | L | LR |
| Maximum Queue (ft) | 22 | 59 |
| Average Queue (ft) | 1 | 27 |
| 95th Queue (ft) | 9 | 51 |
| Link Distance (ft) | 997 | 490 |
| Upstream Blk Time (%) | | |
| Queuing Penalty (veh) | | |
| Storage Bay Dist (ft) | | |
| Storage Blk Time (%) | | |
| Queuing Penalty (veh) | | |

## Network Summary

Network wide Queuing Penalty: 70

## Intersection: 1: Missouri Avenue & 15th Street

| Movement | EB | EB | WB | WB | NB | NB | SB | SB |
|---|---|---|---|---|---|---|---|---|
| Directions Served | L | TR | L | TR | L | TR | L | TR |
| Maximum Queue (ft) | 22 | 236 | 75 | 508 | 73 | 136 | 37 | 51 |
| Average Queue (ft) | 2 | 102 | 60 | 149 | 42 | 49 | 5 | 14 |
| 95th Queue (ft) | 12 | 194 | 88 | 408 | 73 | 99 | 23 | 41 |
| Link Distance (ft) | | 795 | | 1667 | | 1552 | | 171 |
| Upstream Blk Time (%) | | | | | | | | |
| Queuing Penalty (veh) | | | | | | | | |
| Storage Bay Dist (ft) | 50 | | 50 | | 50 | | 50 | |
| Storage Blk Time (%) | 0 | 13 | 29 | 8 | 12 | 5 | 0 | 1 |
| Queuing Penalty (veh) | 0 | 1 | 114 | 15 | 12 | 4 | 0 | 0 |

## Intersection: 2: Pinyon Parkway & 15th Street

| Movement | WB | NB |
|---|---|---|
| Directions Served | L | LR |
| Maximum Queue (ft) | 31 | 33 |
| Average Queue (ft) | 2 | 7 |
| 95th Queue (ft) | 15 | 28 |
| Link Distance (ft) | 1223 | 184 |
| Upstream Blk Time (%) | | |
| Queuing Penalty (veh) | | |
| Storage Bay Dist (ft) | | |
| Storage Blk Time (%) | | |
| Queuing Penalty (veh) | | |

## Intersection: 3: Missouri Avenue & Pinyon Parkway

| Movement | WB | SB |
|---|---|---|
| Directions Served | LR | L |
| Maximum Queue (ft) | 31 | 37 |
| Average Queue (ft) | 16 | 5 |
| 95th Queue (ft) | 40 | 25 |
| Link Distance (ft) | 442 | |
| Upstream Blk Time (%) | | |
| Queuing Penalty (veh) | | |
| Storage Bay Dist (ft) | | 50 |
| Storage Blk Time (%) | | 0 |
| Queuing Penalty (veh) | | 0 |

## Intersection: 4: 21st Street & Missouri Avenue

| Movement | EB | WB | SB | SB |
|---|---|---|---|---|
| Directions Served | LT | TR | L | R |
| Maximum Queue (ft) | 53 | 6 | 40 | 57 |
| Average Queue (ft) | 9 | 0 | 13 | 28 |
| 95th Queue (ft) | 35 | 4 | 39 | 52 |
| Link Distance (ft) | 786 | 997 | 957 | 957 |
| Upstream Blk Time (%) | | | | |
| Queuing Penalty (veh) | | | | |
| Storage Bay Dist (ft) | | | | |
| Storage Blk Time (%) | | | | |
| Queuing Penalty (veh) | | | | |

## Intersection: 5: 21st Street & Jasper Drive

| Movement | EB | SB |
|---|---|---|
| Directions Served | L | LR |
| Maximum Queue (ft) | 33 | 39 |
| Average Queue (ft) | 4 | 17 |
| 95th Queue (ft) | 21 | 43 |
| Link Distance (ft) | 997 | 490 |
| Upstream Blk Time (%) | | |
| Queuing Penalty (veh) | | |
| Storage Bay Dist (ft) | | |
| Storage Blk Time (%) | | |
| Queuing Penalty (veh) | | |

## Network Summary

Network wide Queuing Penalty: 146

## Intersection: 1: Missouri Avenue & 15th Street

| Movement | EB | EB | WB | WB | NB | NB | SB | SB |
|---|---|---|---|---|---|---|---|---|
| Directions Served | L | TR | L | TR | L | TR | L | TR |
| Maximum Queue (ft) | 46 | 194 | 74 | 195 | 75 | 236 | 32 | 39 |
| Average Queue (ft) | 5 | 78 | 27 | 86 | 62 | 87 | 4 | 11 |
| 95th Queue (ft) | 27 | 154 | 67 | 165 | 84 | 182 | 19 | 37 |
| Link Distance (ft) | | 795 | | 1667 | | 1552 | | 171 |
| Upstream Blk Time (%) | | | | | | | | |
| Queuing Penalty (veh) | | | | | | | | |
| Storage Bay Dist (ft) | 50 | | 50 | | 50 | | 50 | |
| Storage Blk Time (%) | 0 | 11 | 2 | 12 | 30 | 5 | 0 | 1 |
| Queuing Penalty (veh) | 0 | 1 | 7 | 6 | 39 | 8 | 0 | 0 |

## Intersection: 2: Pinyon Parkway & 15th Street

| Movement | WB | NB |
|---|---|---|
| Directions Served | L | LR |
| Maximum Queue (ft) | 35 | 64 |
| Average Queue (ft) | 6 | 30 |
| 95th Queue (ft) | 27 | 53 |
| Link Distance (ft) | 1223 | 184 |
| Upstream Blk Time (%) | | |
| Queuing Penalty (veh) | | |
| Storage Bay Dist (ft) | | |
| Storage Blk Time (%) | | |
| Queuing Penalty (veh) | | |

## Intersection: 3: Missouri Avenue & Pinyon Parkway

| Movement | WB | SB |
|---|---|---|
| Directions Served | LR | L |
| Maximum Queue (ft) | 51 | 14 |
| Average Queue (ft) | 25 | 1 |
| 95th Queue (ft) | 48 | 8 |
| Link Distance (ft) | 442 | |
| Upstream Blk Time (%) | | |
| Queuing Penalty (veh) | | |
| Storage Bay Dist (ft) | | 50 |
| Storage Blk Time (%) | | 0 |
| Queuing Penalty (veh) | | 0 |

## Intersection: 4: 21st Street & Missouri Avenue

| Movement | EB | WB | SB | SB |
|---|---|---|---|---|
| Directions Served | LT | TR | L | R |
| Maximum Queue (ft) | 77 | 4 | 34 | 48 |
| Average Queue (ft) | 19 | 0 | 9 | 22 |
| 95th Queue (ft) | 56 | 3 | 32 | 46 |
| Link Distance (ft) | 786 | 997 | 957 | 957 |
| Upstream Blk Time (%) | | | | |
| Queuing Penalty (veh) | | | | |
| Storage Bay Dist (ft) | | | | |
| Storage Blk Time (%) | | | | |
| Queuing Penalty (veh) | | | | |

## Intersection: 5: 21st Street & Jasper Drive

| Movement | EB | SB |
|---|---|---|
| Directions Served | L | LR |
| Maximum Queue (ft) | 16 | 61 |
| Average Queue (ft) | 1 | 29 |
| 95th Queue (ft) | 9 | 53 |
| Link Distance (ft) | 997 | 490 |
| Upstream Blk Time (%) | | |
| Queuing Penalty (veh) | | |
| Storage Bay Dist (ft) | | |
| Storage Blk Time (%) | | |
| Queuing Penalty (veh) | | |

## Network Summary

Network wide Queuing Penalty: 62

## Intersection: 1: Missouri Avenue & 15th Street

| Movement | EB | EB | WB | WB | NB | NB | SB | SB |
|---|---|---|---|---|---|---|---|---|
| Directions Served | L | TR | L | TR | L | TR | L | TR |
| Maximum Queue (ft) | 33 | 267 | 75 | 515 | 74 | 134 | 30 | 56 |
| Average Queue (ft) | 2 | 112 | 57 | 123 | 43 | 50 | 4 | 17 |
| 95th Queue (ft) | 16 | 210 | 85 | 335 | 75 | 102 | 21 | 44 |
| Link Distance (ft) | | 795 | | 1667 | | 1552 | | 171 |
| Upstream Blk Time (%) | | | | | | | | |
| Queuing Penalty (veh) | | | | | | | | |
| Storage Bay Dist (ft) | 50 | | 50 | | 50 | | 50 | |
| Storage Blk Time (%) | 0 | 14 | 25 | 8 | 12 | 6 | 0 | 1 |
| Queuing Penalty (veh) | 0 | 1 | 97 | 12 | 11 | 5 | 0 | 0 |

## Intersection: 2: Pinyon Parkway & 15th Street

| Movement | WB | NB |
|---|---|---|
| Directions Served | L | LR |
| Maximum Queue (ft) | 52 | 54 |
| Average Queue (ft) | 19 | 23 |
| 95th Queue (ft) | 47 | 50 |
| Link Distance (ft) | 1223 | 184 |
| Upstream Blk Time (%) | | |
| Queuing Penalty (veh) | | |
| Storage Bay Dist (ft) | | |
| Storage Blk Time (%) | | |
| Queuing Penalty (veh) | | |

## Intersection: 3: Missouri Avenue & Pinyon Parkway

| Movement | WB | SB |
|---|---|---|
| Directions Served | LR | L |
| Maximum Queue (ft) | 31 | 28 |
| Average Queue (ft) | 10 | 2 |
| 95th Queue (ft) | 34 | 14 |
| Link Distance (ft) | 442 | |
| Upstream Blk Time (%) | | |
| Queuing Penalty (veh) | | |
| Storage Bay Dist (ft) | | 50 |
| Storage Blk Time (%) | | 0 |
| Queuing Penalty (veh) | | 0 |

## Intersection: 4: 21st Street & Missouri Avenue

| Movement | EB | WB | SB | SB |
|---|---|---|---|---|
| Directions Served | LT | TR | L | R |
| Maximum Queue (ft) | 53 | 8 | 34 | 61 |
| Average Queue (ft) | 9 | 0 | 12 | 31 |
| 95th Queue (ft) | 36 | 5 | 36 | 53 |
| Link Distance (ft) | 786 | 997 | 957 | 957 |
| Upstream Blk Time (%) | | | | |
| Queuing Penalty (veh) | | | | |
| Storage Bay Dist (ft) | | | | |
| Storage Blk Time (%) | | | | |
| Queuing Penalty (veh) | | | | |

## Intersection: 5: 21st Street & Jasper Drive

| Movement | EB | SB |
|---|---|---|
| Directions Served | L | LR |
| Maximum Queue (ft) | 33 | 47 |
| Average Queue (ft) | 5 | 20 |
| 95th Queue (ft) | 23 | 46 |
| Link Distance (ft) | 997 | 490 |
| Upstream Blk Time (%) | | |
| Queuing Penalty (veh) | | |
| Storage Bay Dist (ft) | | |
| Storage Blk Time (%) | | |
| Queuing Penalty (veh) | | |

## Network Summary

Network wide Queuing Penalty: 125